Numatic

TECHNICAL SHEET

EM1-TM

Name	EM1-TM
Reference	913343
EAN code	05028965820575
Waste Bag Capacity	120L / 2x 70L
Storage	Shelf
Castor Size	4 x 100mm
Kits	SRK14 / 22 / DTK9
Optional Security	N/A
Optional SprayMop	N/A
Wall and door Buffers	Yes
Recycled Content	Minimum 77%
Dimensions (WxLxH)	545x900x1000 mm
Packed Dimensions (WxLxH)	620x410x1160 mm

ReFlo TECHNOLOGY

Made using Recycled Plastic

ReFlo Technology uses the highest quality recycled plastic, delivering the same Numatic reliability, durability and quality as always.

This product meets all the necessary qualifications to be certified for the following claim:
SCS RECYCLED CONTENT CERTIFIED

CERTIFIED RECYCLED MATERIAL™ SCS GLOBAL SERVICES

MADE WITH 77%
RECYCLED PLASTIC
POST-CONSUMER | PRE-CONSUMER

ECO-MATIC EM1-TM

A small, compact and convenient cleaning storage trolley, the ECO-Matic EM1-TM Cleaning Trolley offers a generous 120L waste bin facility, easy-access open shelf storage and top storage tray for all your cleaning equipment and supplies, with the extra advantage of a Twist Mop Kit, Dolly Mop Bucket and 2 x 10L Buckets.

Designed for enhanced usability, productivity and simplicity, the EM1-TM Cleaning Trolley is easy to assemble, convenient to store and ready to equip for a wide range of applications.

The ECO-Matic Cleaning Trolley range benefits from unique heavy-duty Structofoam construction, using co-polymer grade material, making it tough, chemical-resistant, easy to clean and built to last.

Recommended for Office Cleaning, Healthcare Cleaning, School and Education Cleaning and General Janitorial Cleaning.

Numatic International Limited 2026
All rights reserved.specification subject to change without prior notice.

ECO-Matic Mop Kits & Accessories

KIT SRK14

◊ 1 x 18L Blue Handle Bucket, Grey
◊ C/W Mop Basket
◊ Used on: EM1 / EM2
PN: 910439

KIT SRK15

◊ 1 x 34L Blue Handle Bucket, Grey
◊ C/W Mop Basket
◊ Used on: EM3 / EM5
PN: 910440

KIT SRK16 / SRK16K

◊ Vertical Press for Flat or Kentucky/Twist Mop
◊ 1 x 17L Red Handle Bucket, Grey
◊ 1 x 17L Blue Handle Bucket, Grey
◊ Used on: EM3 / EM5
Flat Mop Press PN: 910442
Kentucky Mop Press PN: 910443

KIT SRK19 BAG FRAME KIT

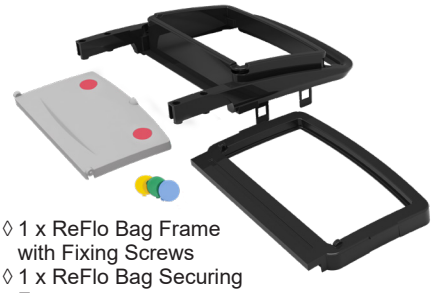

◊ 1 x ReFlo Bag Frame with Fixing Screws
◊ 1 x ReFlo Bag Securing Frame
◊ 1 x Grey Lid
◊ C/W Colour-coded Discs
◊ Used on: EM3 / EM5
PN: 910843

KIT SRK20

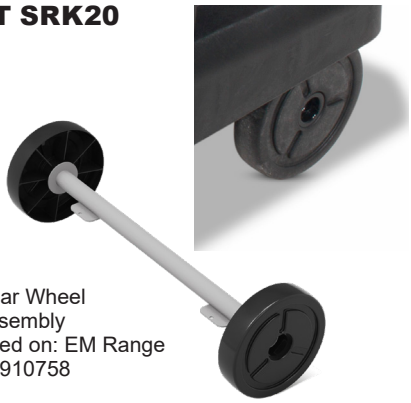

◊ Rear Wheel Assembly
◊ Used on: EM Range
PN: 910758

KIT SRK21

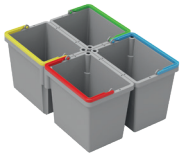

◊ 4 x 5L Swing Pails
◊ 5L Swing Pail Handle, Red / Blue / Green / Yellow
◊ Used on: EM Range
PN: 910898

KIT SRK22

◊ 2 x 10L Buckets, Grey
◊ 10L Bucket Handle, Red / Blue
◊ Used on: EM Range
PN: 911401

NUMATIC QUICK TROLLEY BRACKET

◊ 1 x Numatic Quick Trolley Bracket
◊ Used on: EM Range
PN: 916341

- ► Robust design to protect the Numatic Quick
- ► Easy to fit
- ► Compact in size
- ► Integrated non-marking buffers for wall and door protection

MOP CLIPS

◊ Mopstick Clip (x1) ReFlo Black PN: 629874
◊ Mopstick Clip (x10) ReFlo Black PN: 629883
◊ Used on: EM Range

LARGE T-SLOT HOOK

◊ x1 PN: 911936
◊ x10 PN: 912547
◊ Used on: EM Range

SMALL T-SLOT HOOK

◊ x1 PN: 915171
◊ x10 PN: 915325
◊ Used on: EM Range

MOP SUPPORT KIT

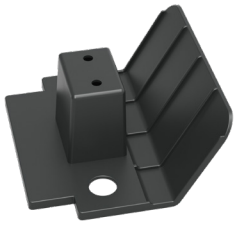

◊ 1 x Mop Support for On-board Mop Storage
◊ Used on: EM Range
PN: 915321

ECO-MATIC BAG SPLITTER KIT

◊ 1 x Bag Splitter with Fixing Screws for Dual Waste
◊ 1 x Bag Trapper Extrusion
◊ C/W Bags
◊ C/W Roll of 70L Waste Bags
◊ C/W Colour-coded Discs
◊ Used on: EM Range
PN: 910840

ZIPPED LAUNDRY BAG

◊ 1 x Zipped Laundry Bag
◊ Used on: EM Range
PN: 909369