MM-5

Numatic

numatic.com

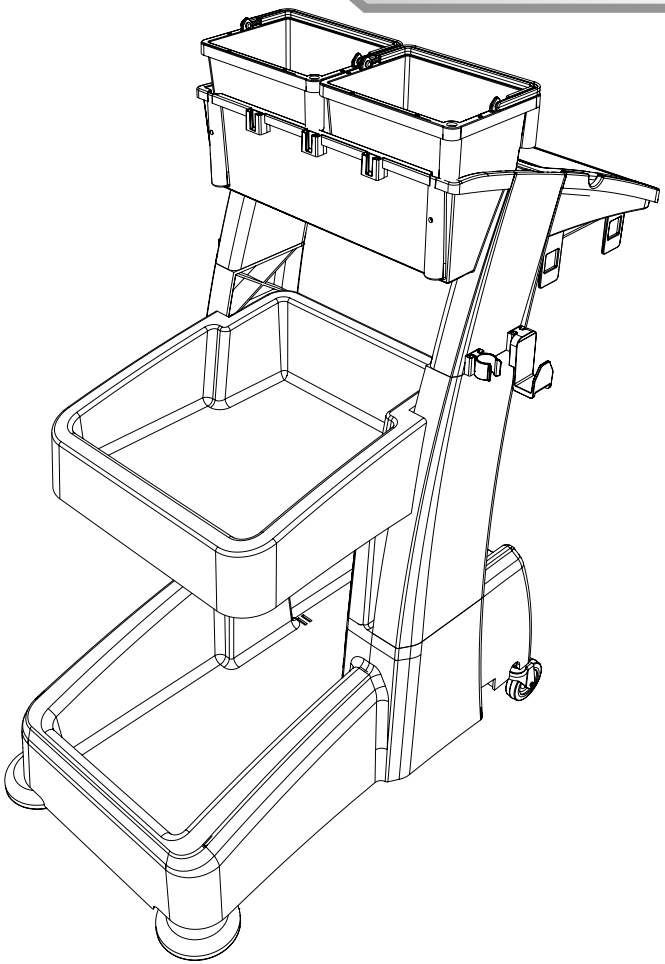

Original Instructions

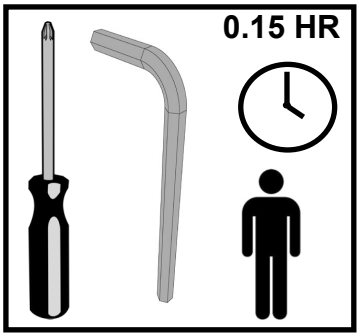
0.15 HR

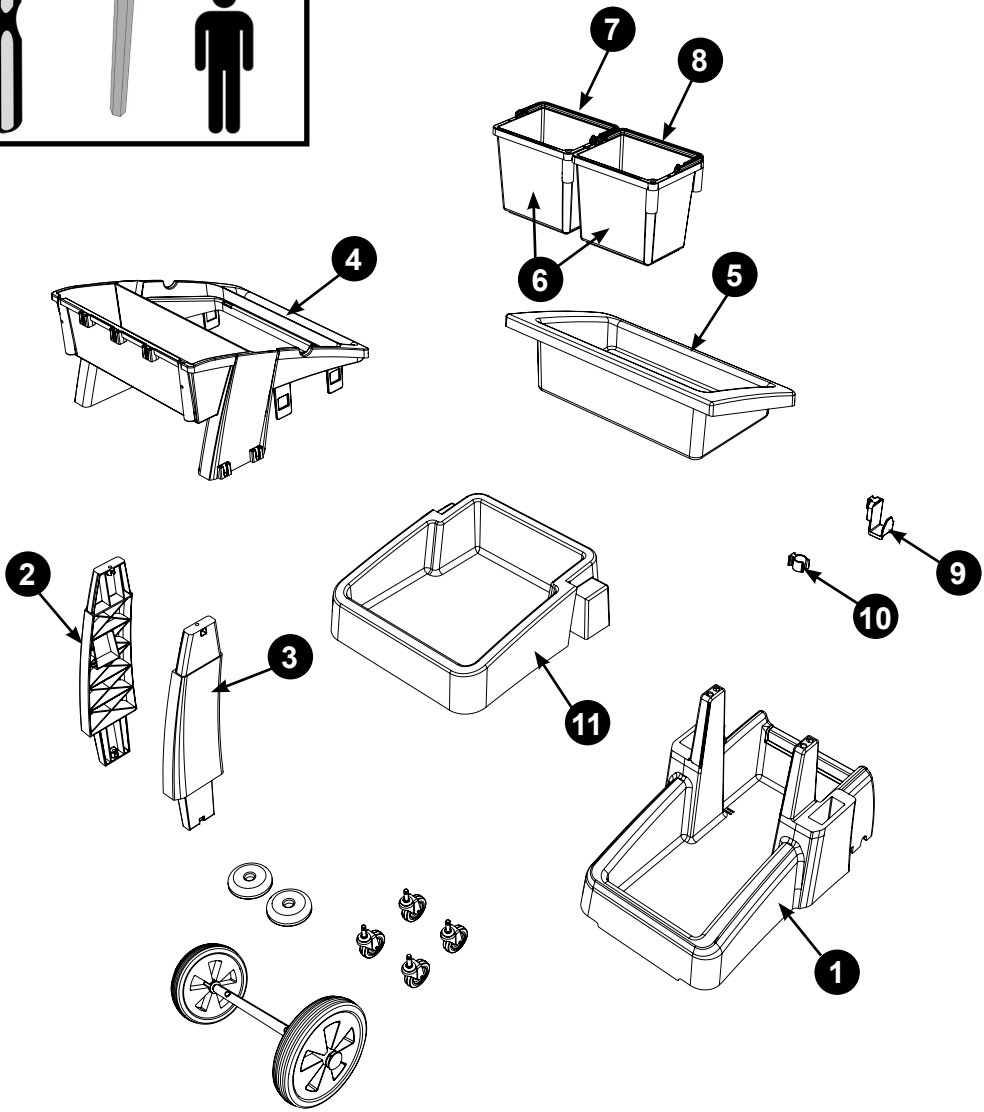
7
8
6
5
4
2
3
11
9
10
1

Item	Description	Quantity
1	Reflo Base	1
2	Left Hand Upright	1
3	Right Hand Upright	1
4	Handle Frame	1
5	Top Tray	1
6	5 Litre Bucket	2
7	Red Handle	1
8	Blue Handle	1
9	Versaclean Hook T Slot	1
10	22mm Mid Mop Clamp	1
11	Storage Tray	1
Optional Extra:	Axel and Wheel Assembly	1

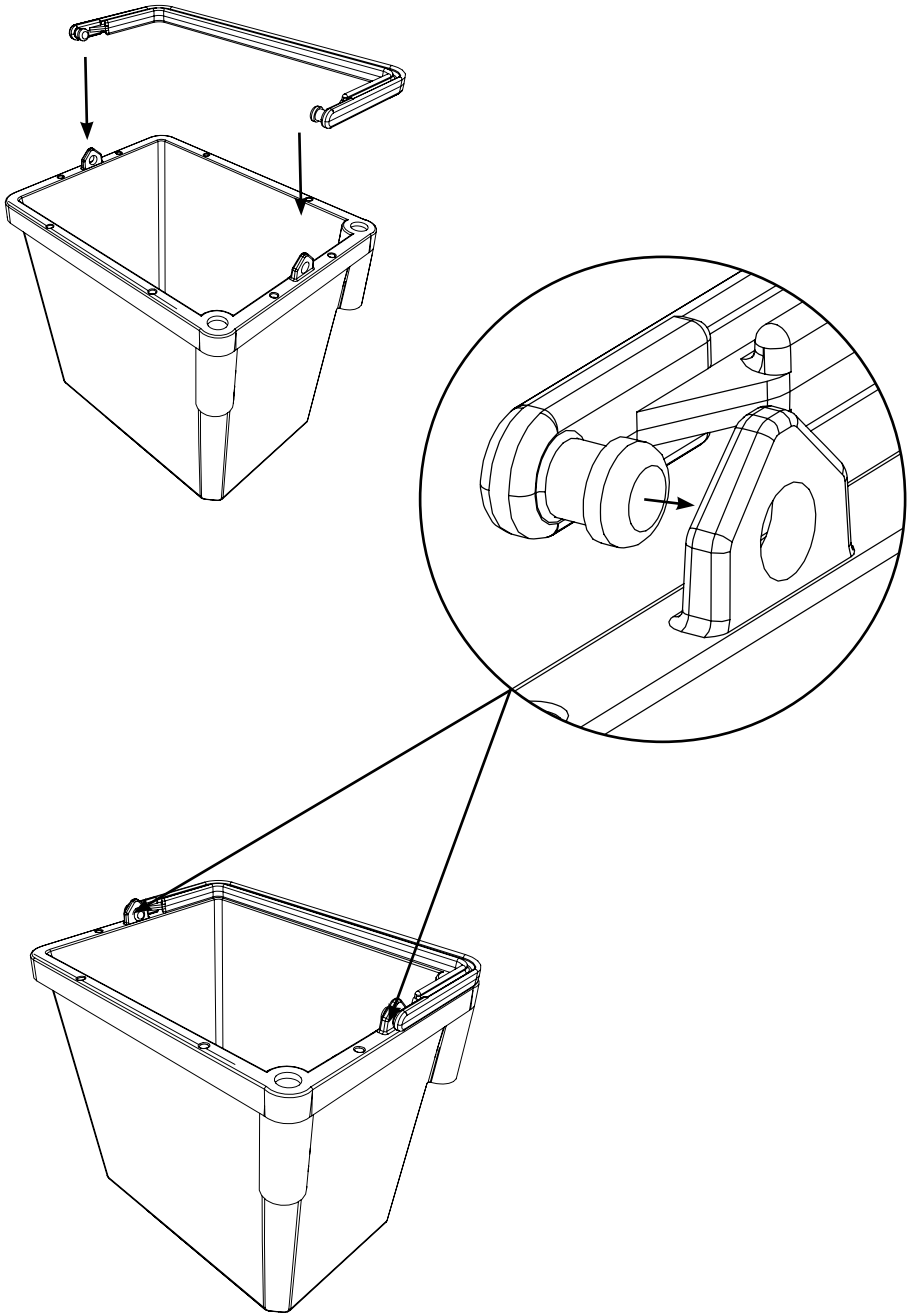

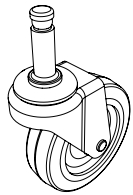

x4

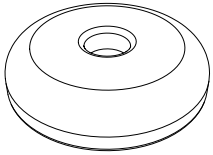

x2

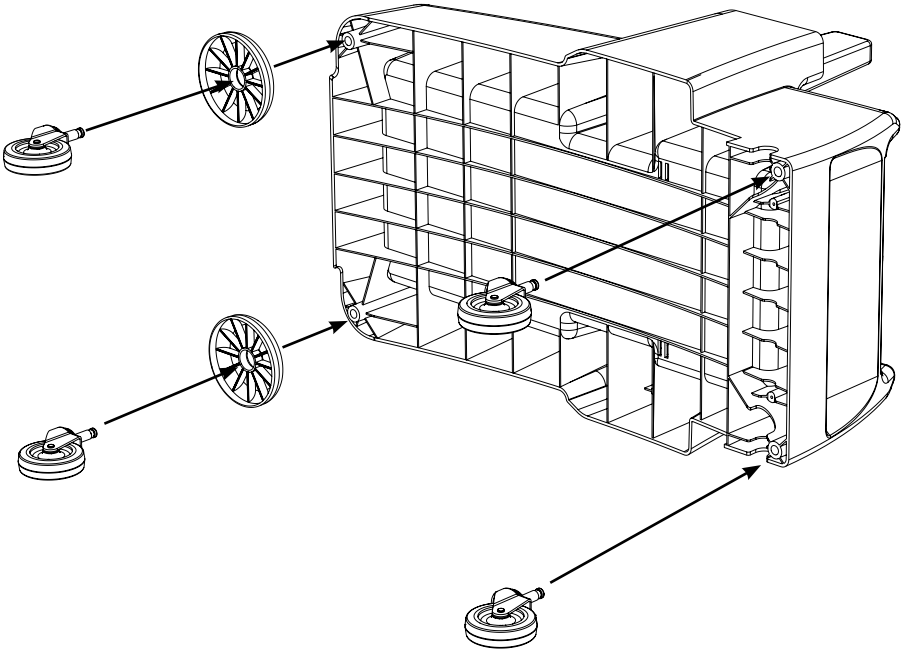

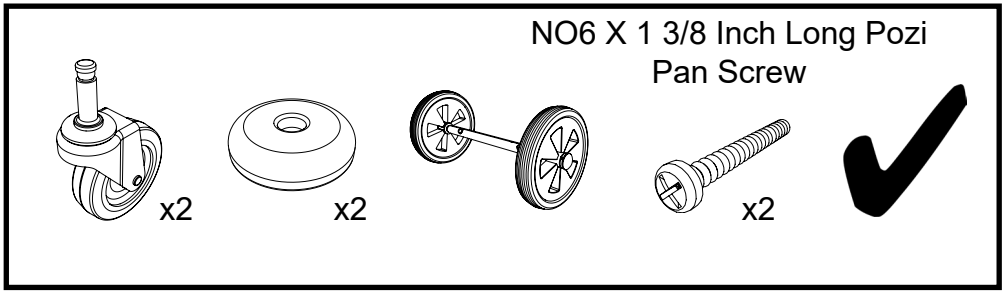
NO6 X 1 3/8 Inch Long Pozi
Pan Screw
x2
x2
x2

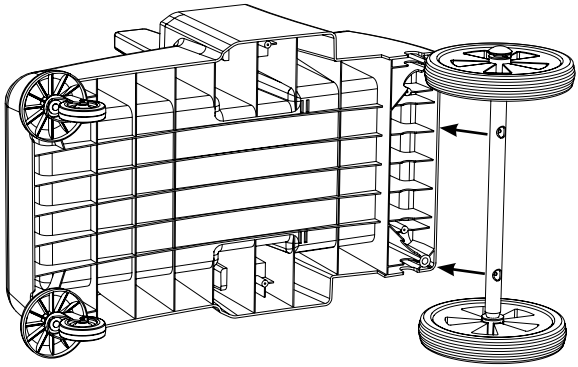

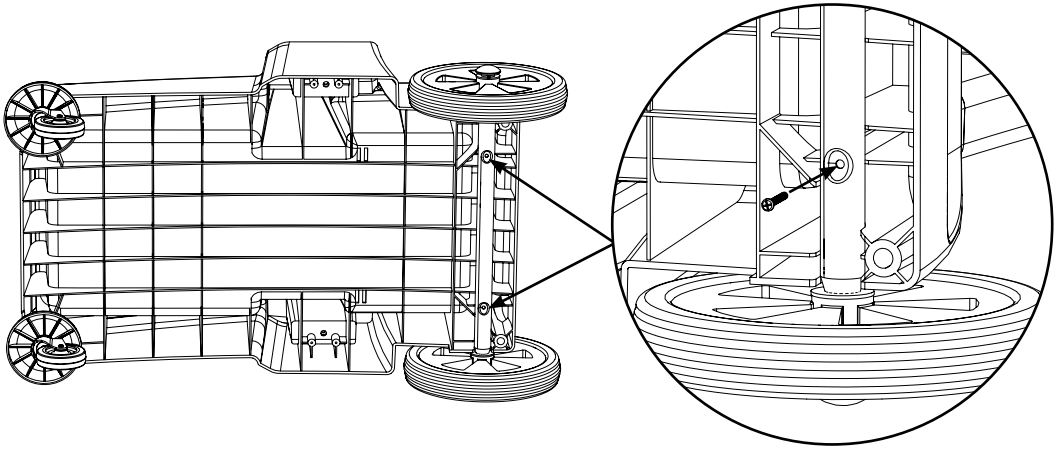

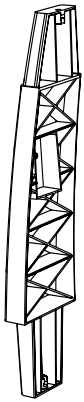

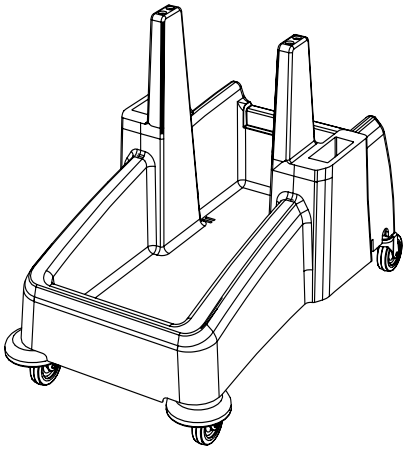

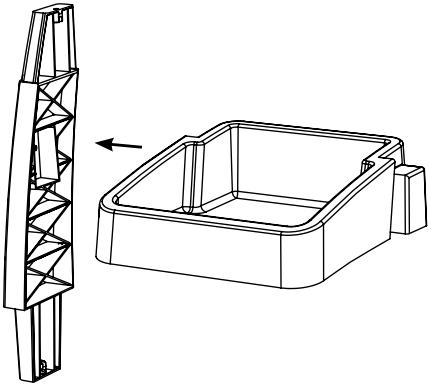

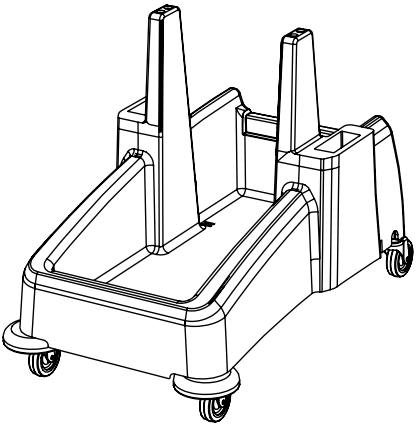

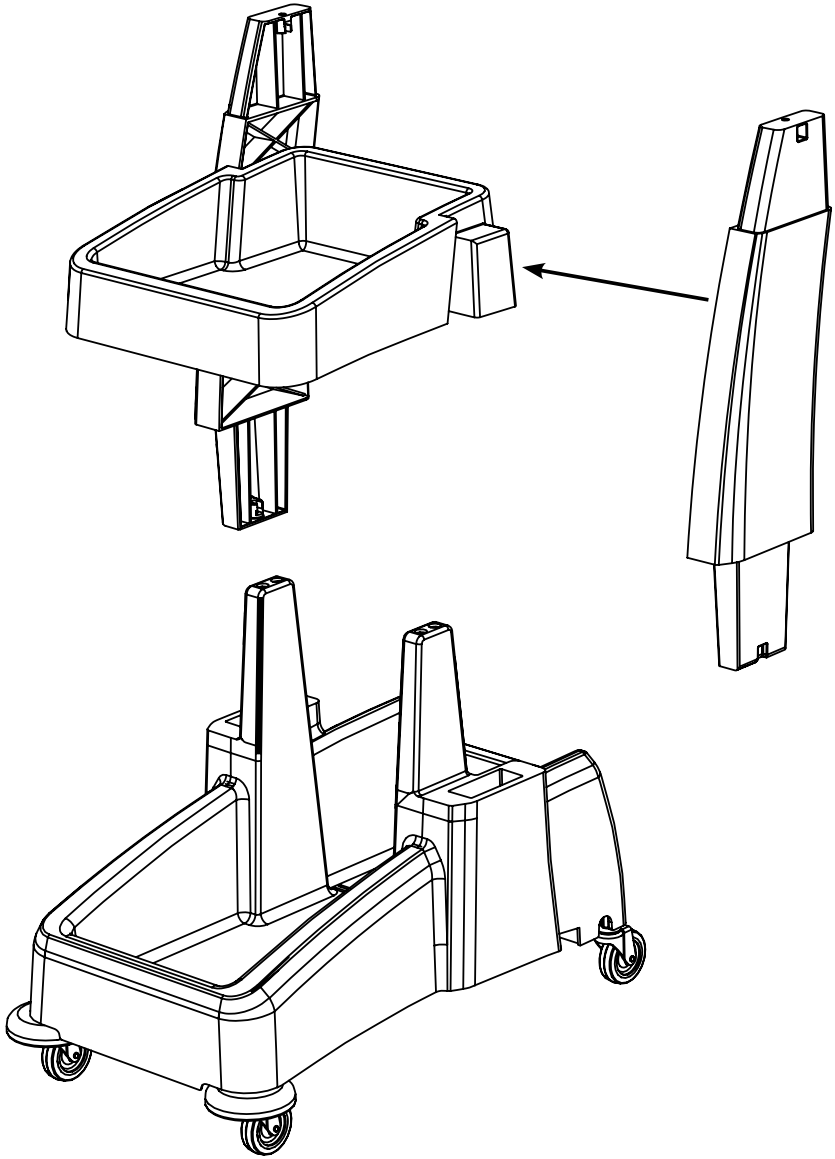

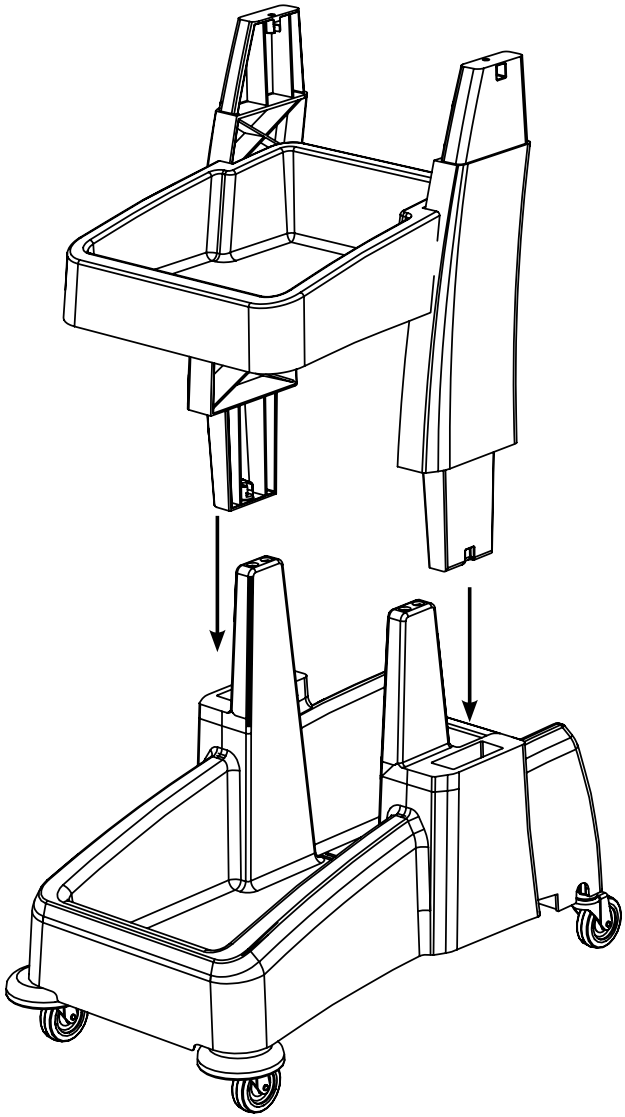

M8 X 25mm Socket Bolt

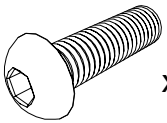

x2

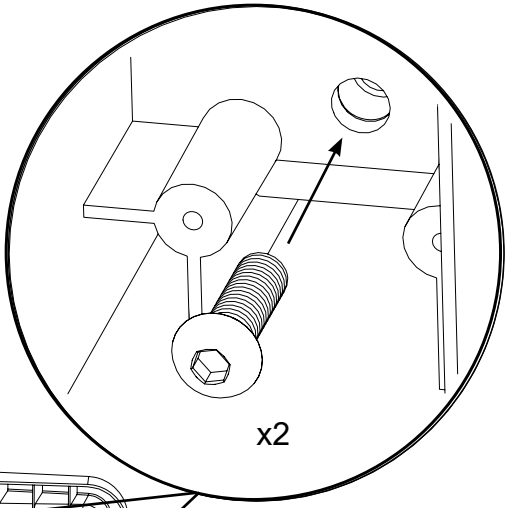

x2

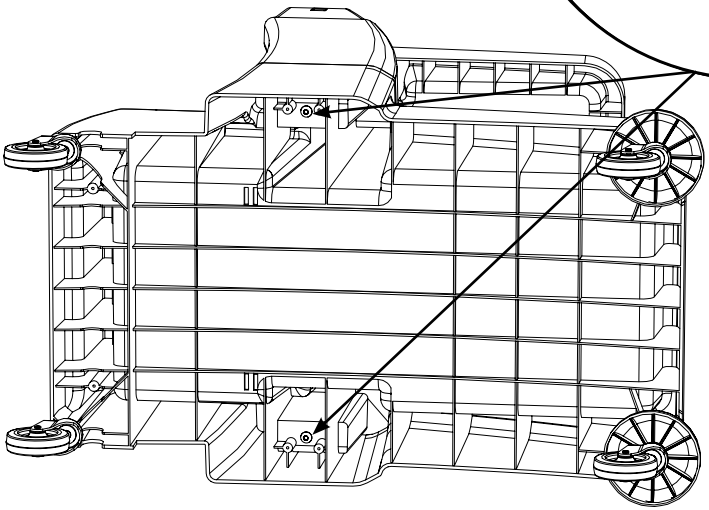

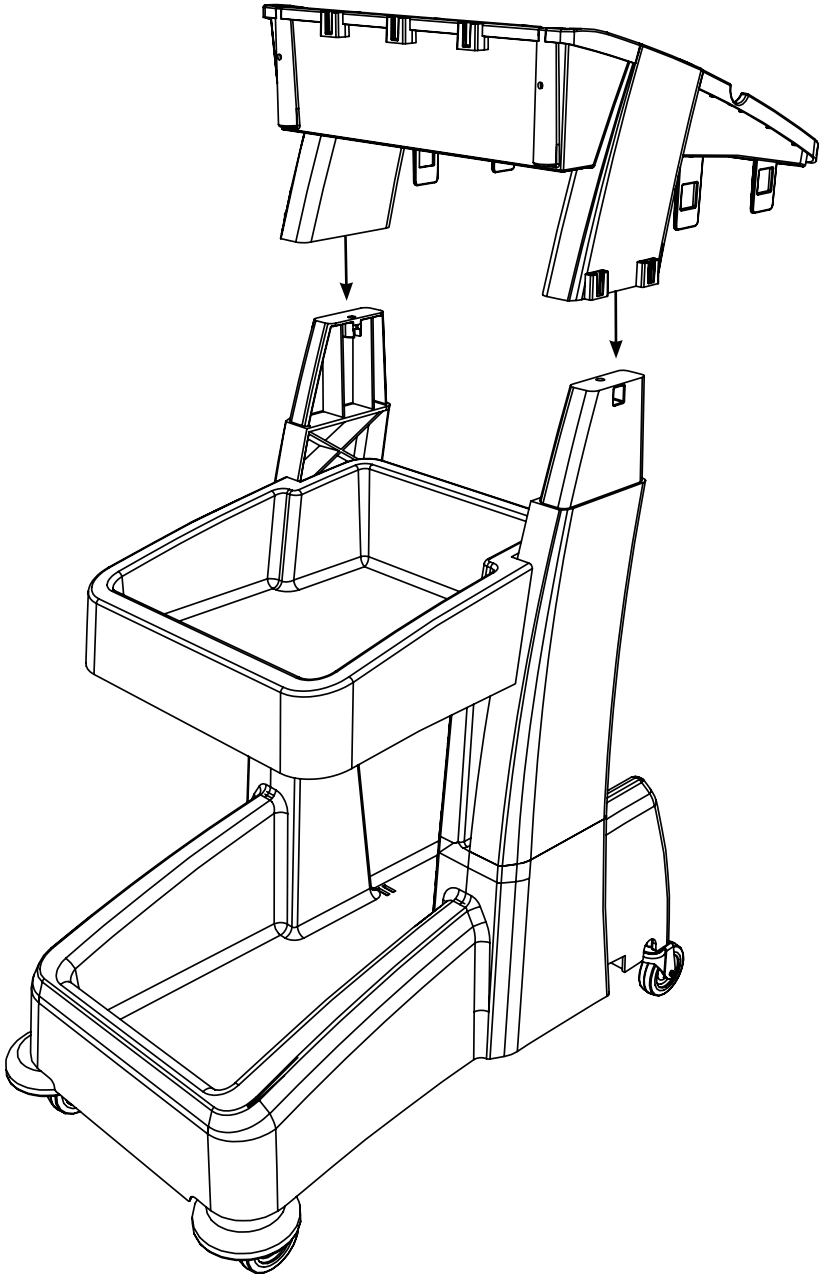

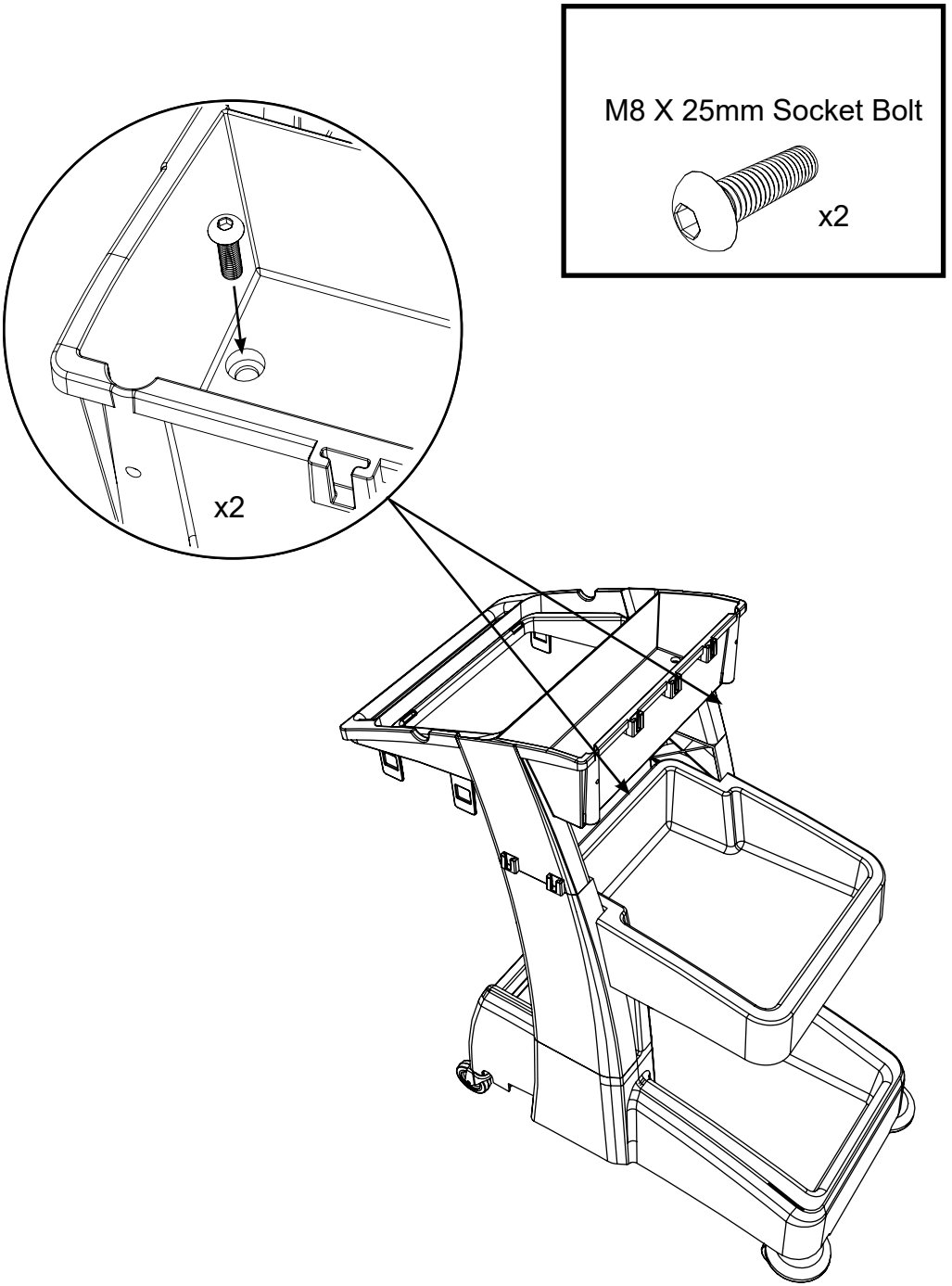
M8 X 25mm Socket Bolt
x2
x2

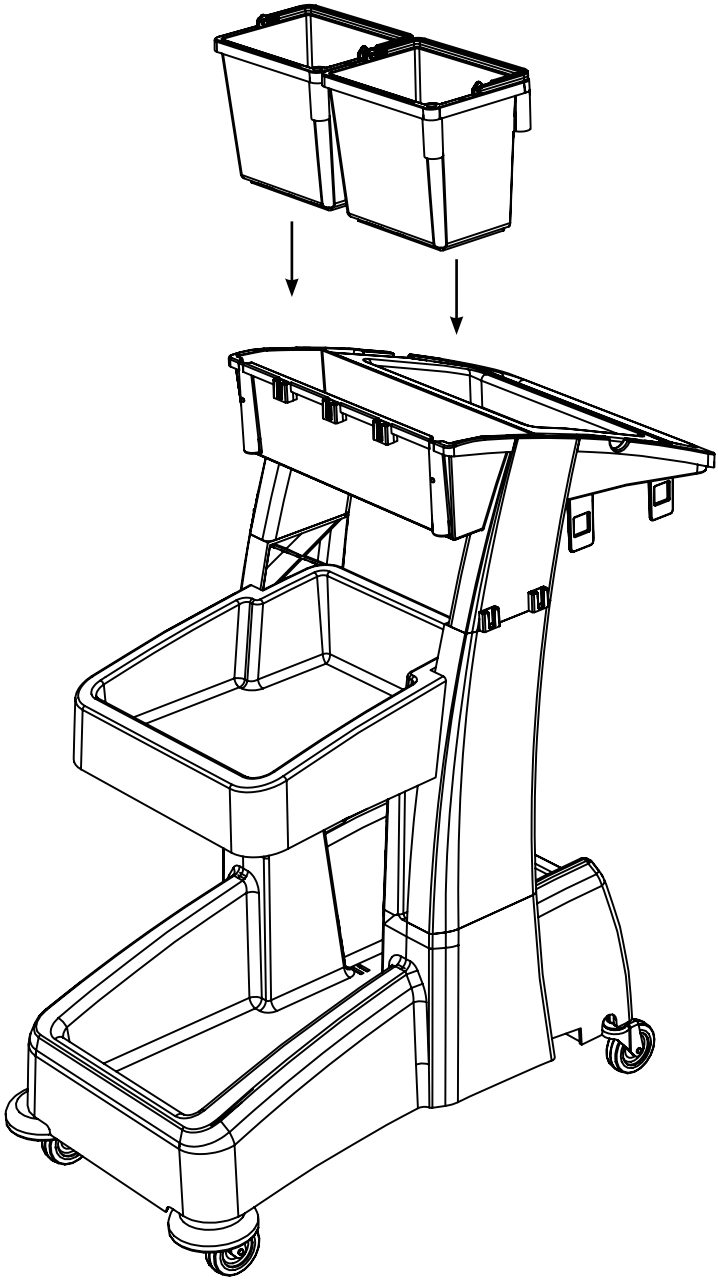

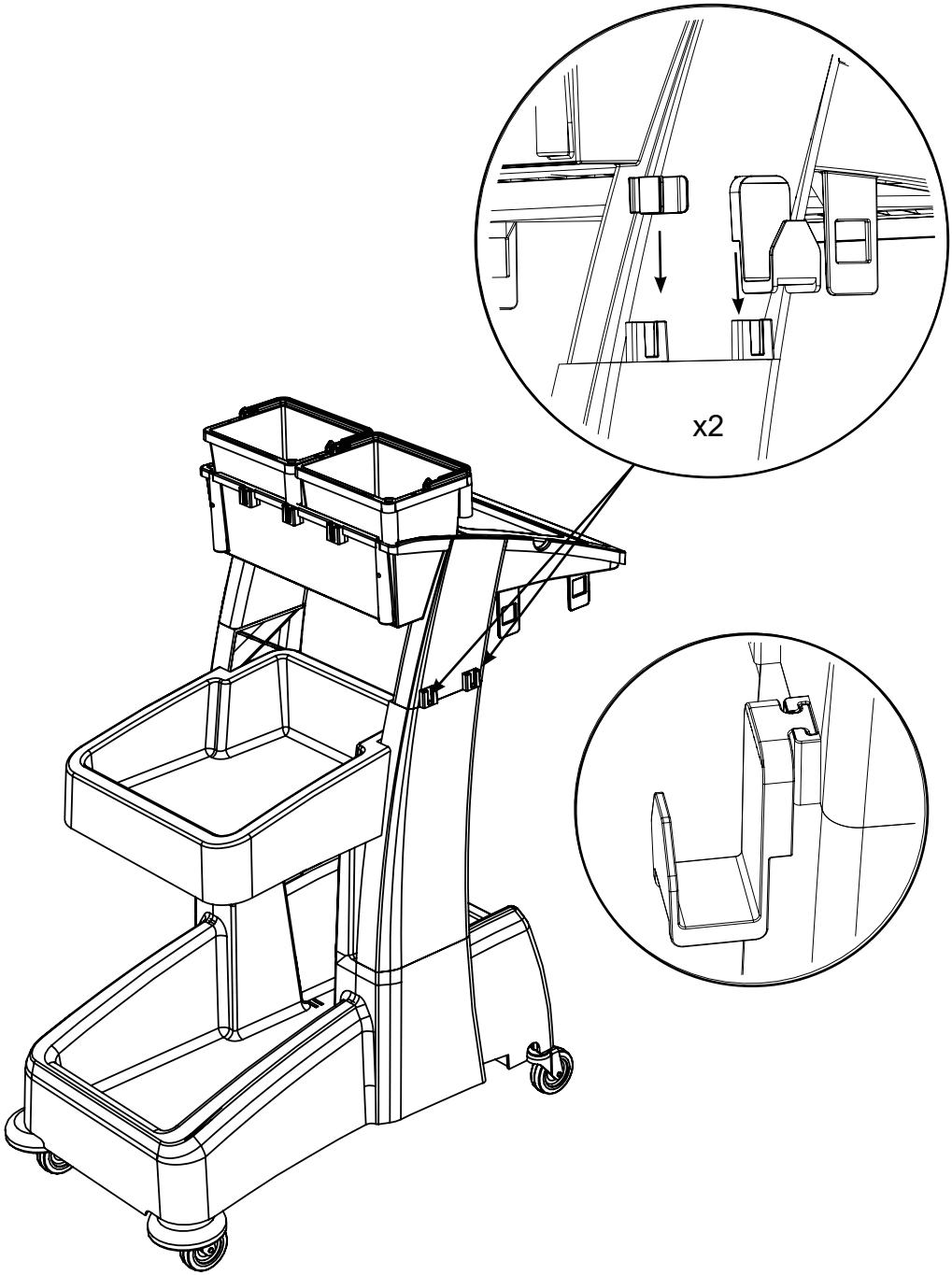
x2

Numatic International Limited (Head Office)
Chard, Somerset TA20 2GB, UNITED KINGDOM
Tel: 01460 68600 numatic.com

Numatic International GmbH
Fränkische Straße 15-19, 30455 Hannover,
DEUTSCHLAND Tel: +49 (0) 511 984 2160 numatic.de

Numatic International Denmark
Fränkische Straße 15-19, 30455 Hannover, DEUTSCHLAND
Tel: +45 (0) 316 40808 numatic-online.dk

Numatic International S.A.S
13/17 rue du Valengelier, EAE la Tuilerie, 77500 Chelles, FRANCE
Tel: +33 (0) 164 726 161 numatic.fr

Numatic International BV
Vennootsweg 15, 2404 CG, Alphen aan den Rijn, NEDERLAND
Tel: +31 (0) 172 467 999 numatic.nl

Numatic International Schweiz AG.
Sihlbruggstrasse 3A, 6340 Baar, SCHWEIZ
Tel: +41 (0) 41 768 0760 numatic.ch

Numatic International (PTY) Ltd.
Cnr. 16th & Pharmaceutical Road, Randjes Park,
Midrand 1685, SOUTH AFRICA
Tel: +27 (0) 861 686 284 numatic.co.za

Numatic International ULDA
Rua Francisco da Silva Duarte, nº79,
4475-269 Santa Maria de Avioso, Castêlo da Maia, PORTUGAL
Tel: +351 220 047 700 numatic.pt

Numatic International Spain, S.L.U.
Av. Baix Llobregat, 5-7, Oficina bajos 1 (Parc Negocis Mas Blau II)
08820 El Prat de Llobregat (Barcelona), SPAIN
Tel: +34 93 647 22 22 numatic.es

Numatic International Italy S.R.L
Via Luigi Galvani, 2, Z.I. Talponedo, 33080 Porcia (PN), ITALY
Tel: +39 (0) 434 046 211 numatic.it

Edco, Edgar Edmondson Pty Ltd
Head Office: PO Box 198, Marrickville, NSW 1475, AUSTRALIA
Delivery & Shipping Address
18 Garden St, Marrickville, NSW 2204, AUSTRALIA
Office Number: +61 (0)2 9557 4411, Fax Number: +61 (0)2 9519 9223,
Email: orders@edmondson.net.au ABN: 27 000 450 144

Proquip NZ Ltd
7a Peterkin Street, Taita, Lower Hutt, 5019
Tel: +64 4 566 7847, Fax: +64 4 576 0430
Web: www.proquipnz.co.nz

914825 07/25 (A06)

Numatic
numatic.com