NKT0/1/2 LLR

Numatic

numatic.com

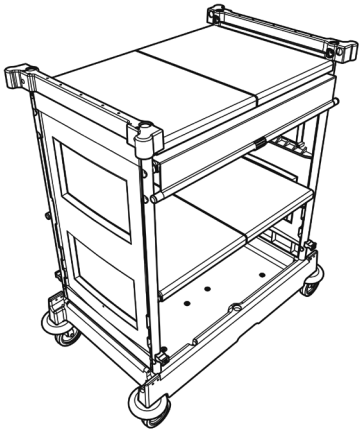

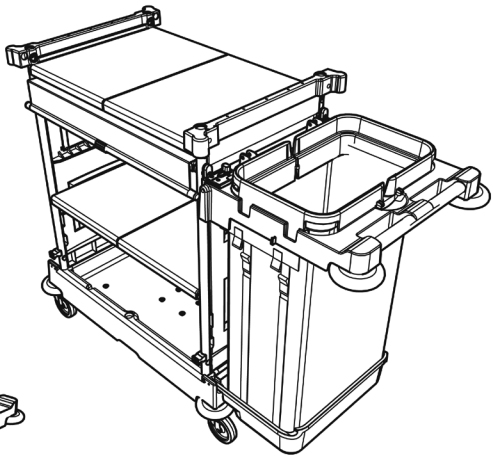

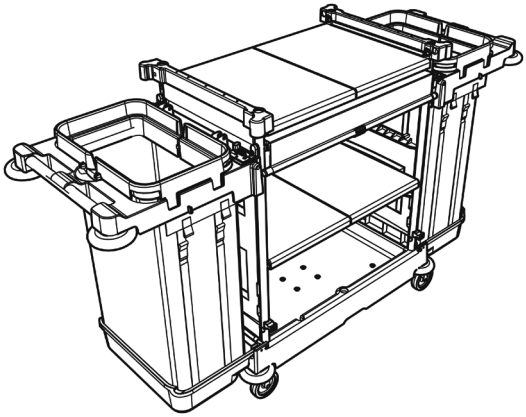

Original Instructions

NKT0/1/2 LLR

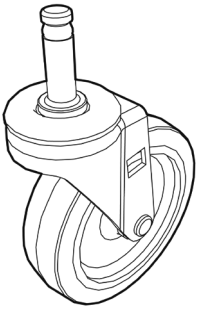

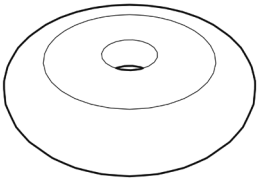

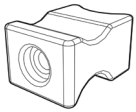

M5 X 40

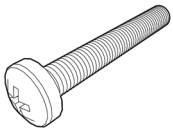

X4 **X4** **X4** **X4**

No8 x1 1/2 inch

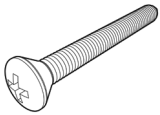

M6 X 70

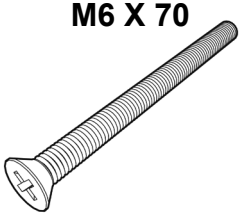

M8

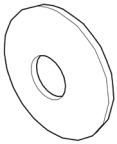

M8 X 25

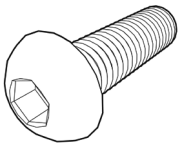

X6 **X2** **X4** **X4**

NKT1 LLR

M5 X 25

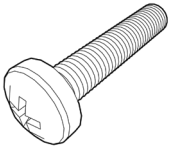

M5 x 30

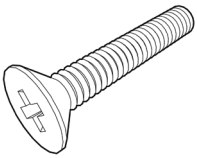

X2 **X2**

NKT2 LLR

M5 X 25

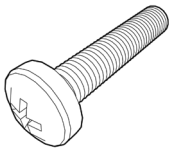

M5 x 30

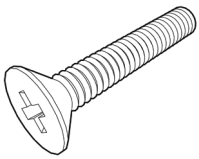

X4 **X4**

NKT0/1/2 LLR

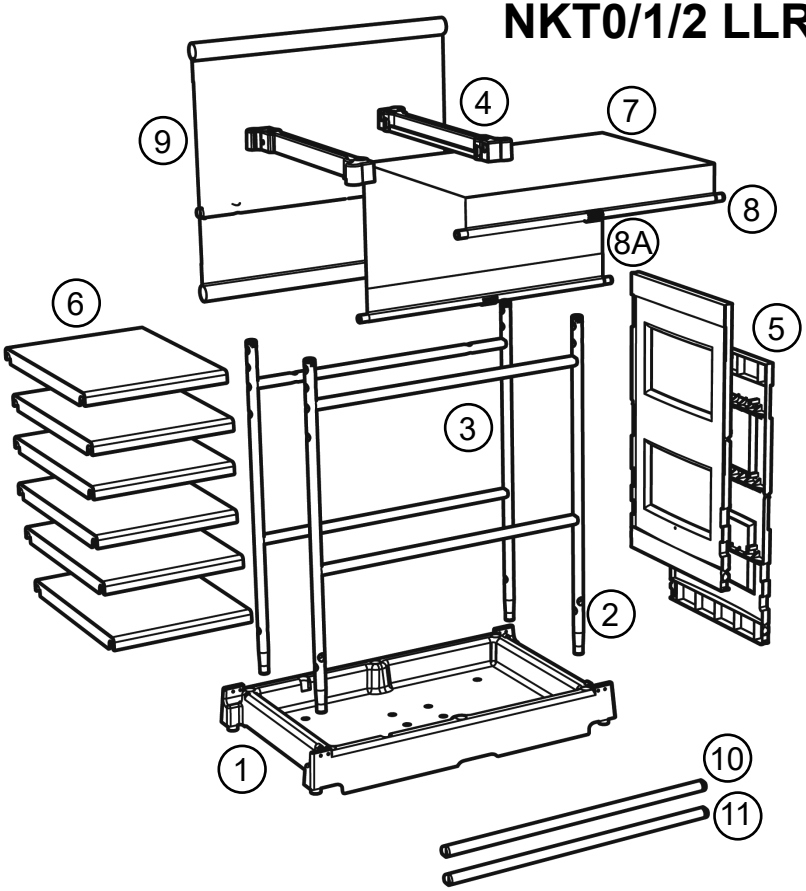

NKT1/2 LLR

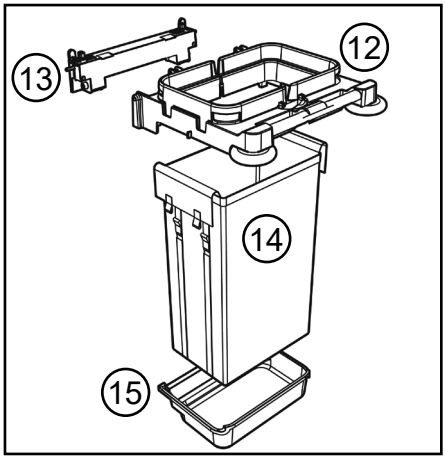

NKT2 LLR

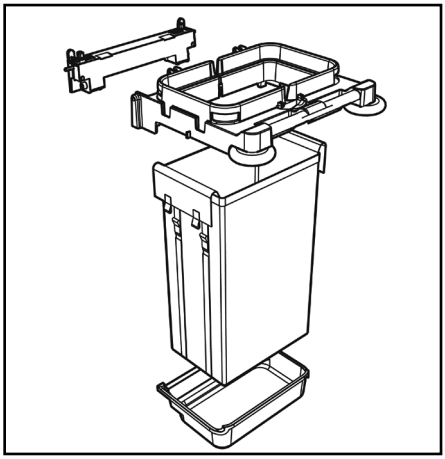

NKS0/1/2 LLR

ITEM	DESCRIPTION	QTY
1	BASE	1
2	FRONT UPRIGHT FRAME	1
3	REAR UPRIGHT FRAME	1
4	DOOR MOUNTING MOULDING	2
5	PANEL MOULDING	2
6	SHELF	6
7	TWIN SLIDING COVER	1
8	COVER PULL TUBE	2
8A	COVER TUBE PROFILE MOULDING	2
9	TWIN REAR COVER	1
10	UPPER REAR TIE BAR WITH HOLES	1
11	UPPER TIE BAR NO HOLES	1

NKT1/2 LLR

ITEM	DESCRIPTION	NKT1R	NKT2R
12	BAG SUPPORT FRAME ASSEMBLY	1	2
13	BAG SUPPORT FRAME MOUNTING	1	2
14	100LTR LAUNDRY BAG	1	2
15	BAG SUPPORT TRAY	1	2

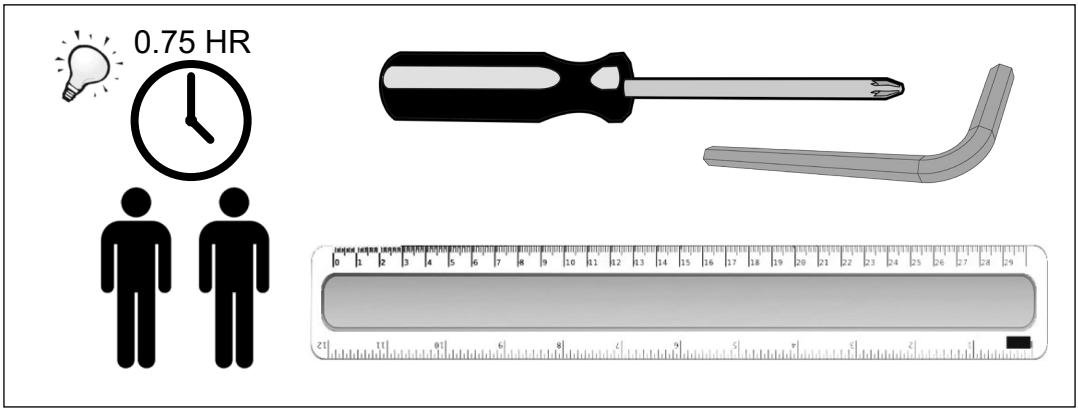

NKT0/1/2 LLR

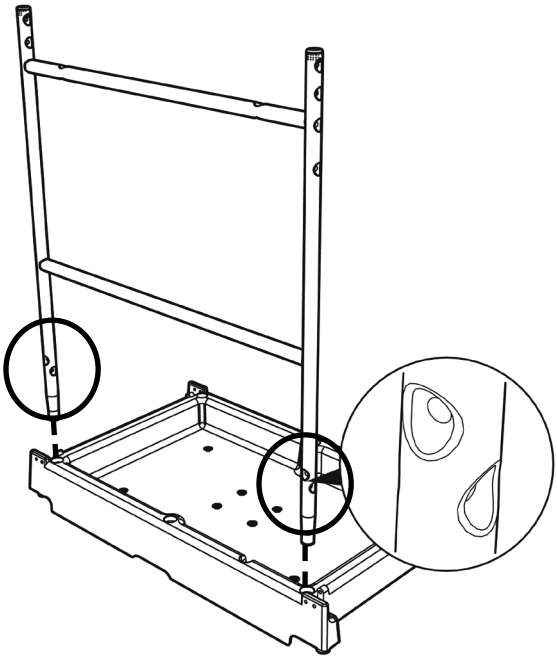

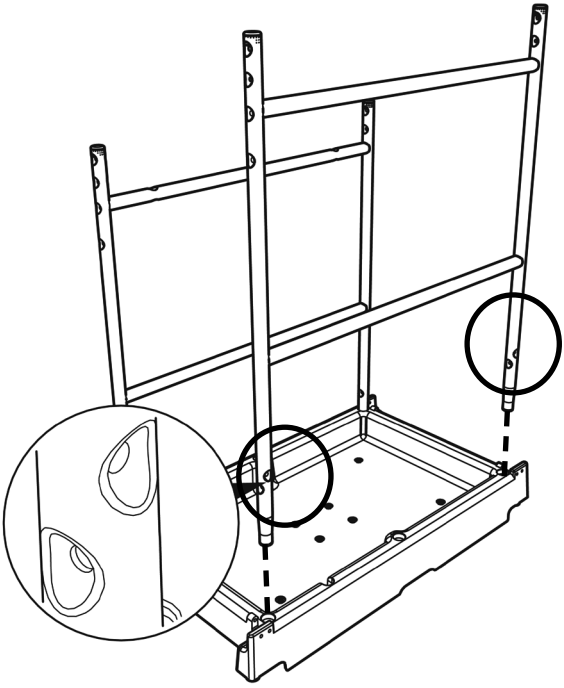

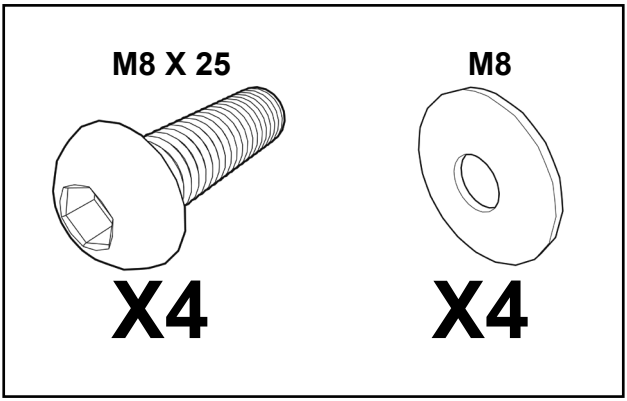
M8 X 25
M8
X4
X4

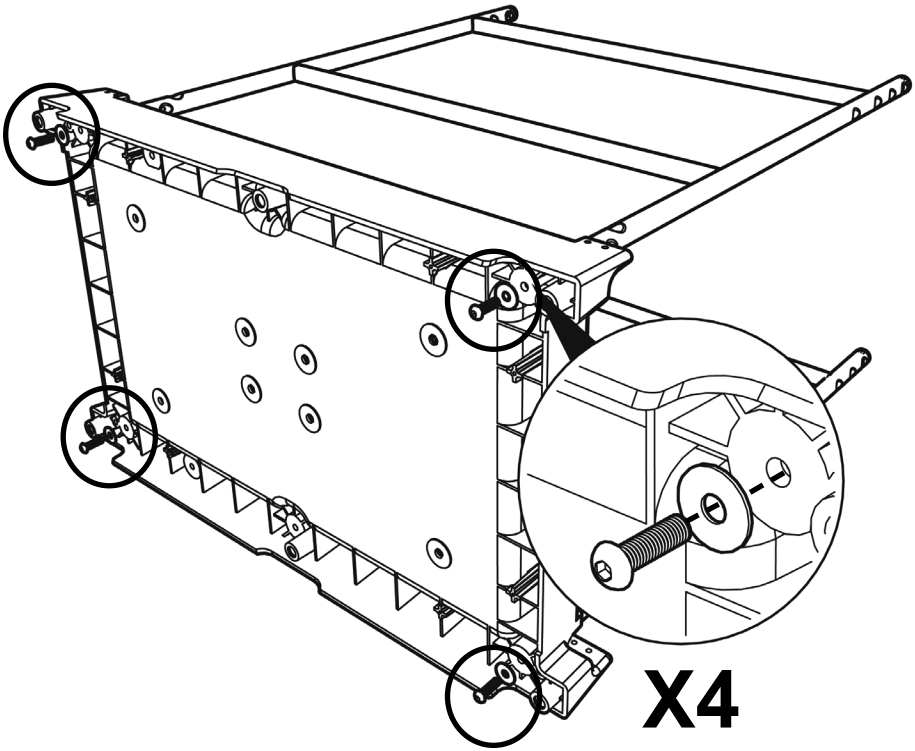
X4

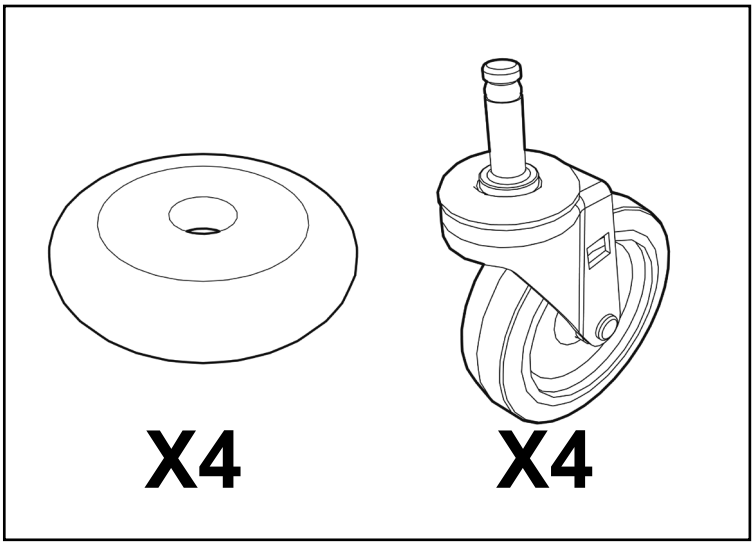
X4
X4

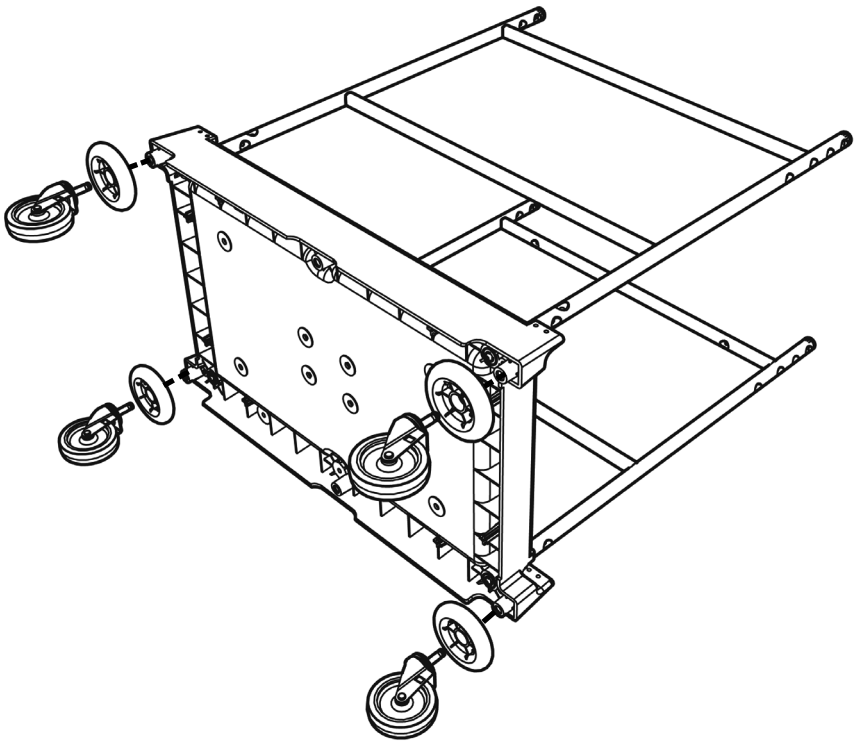

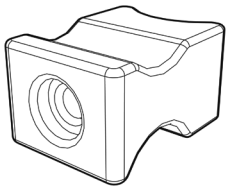

X4

M5 X 40

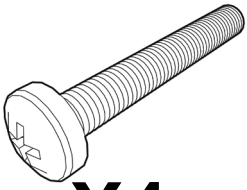

X4

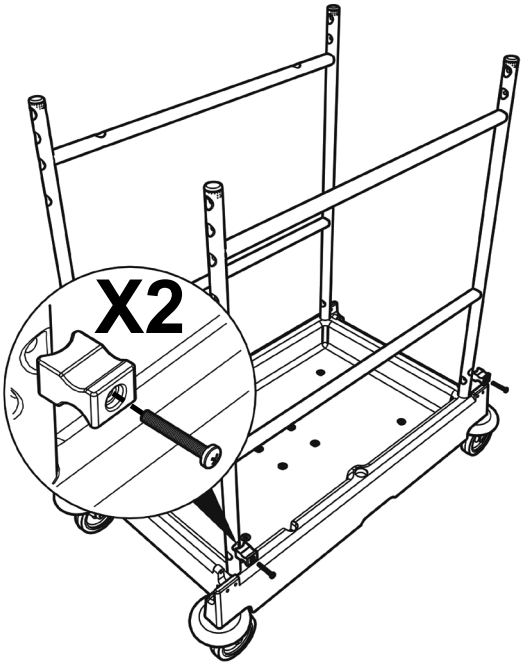

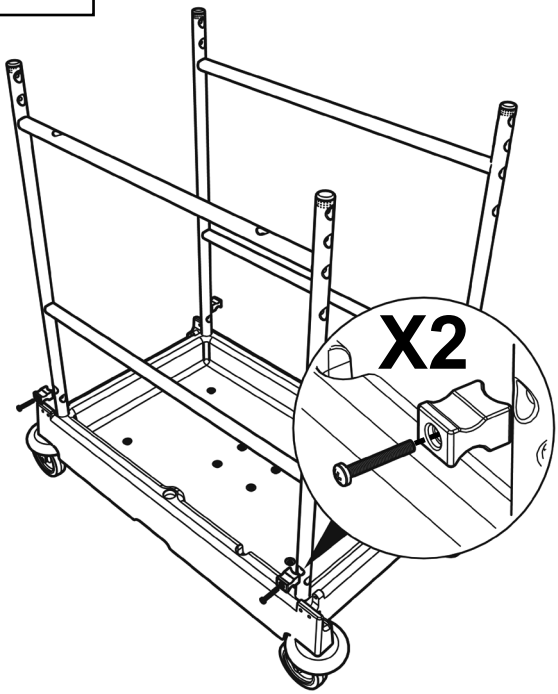

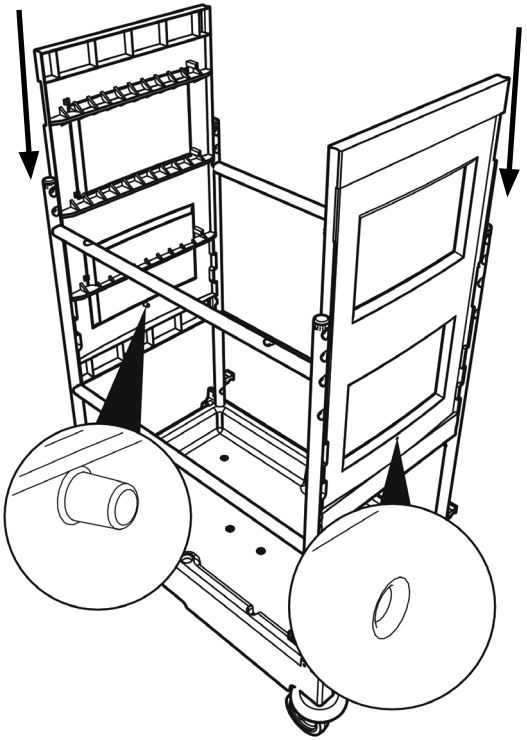

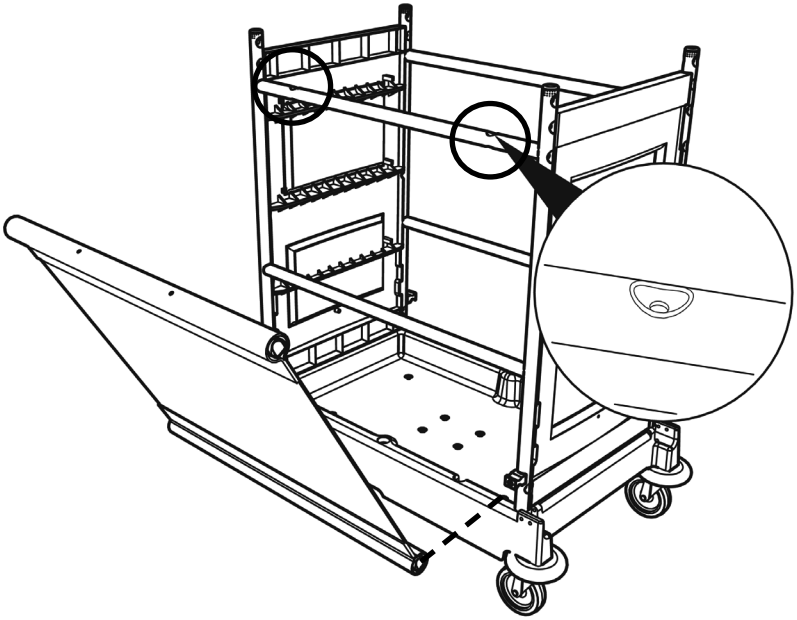

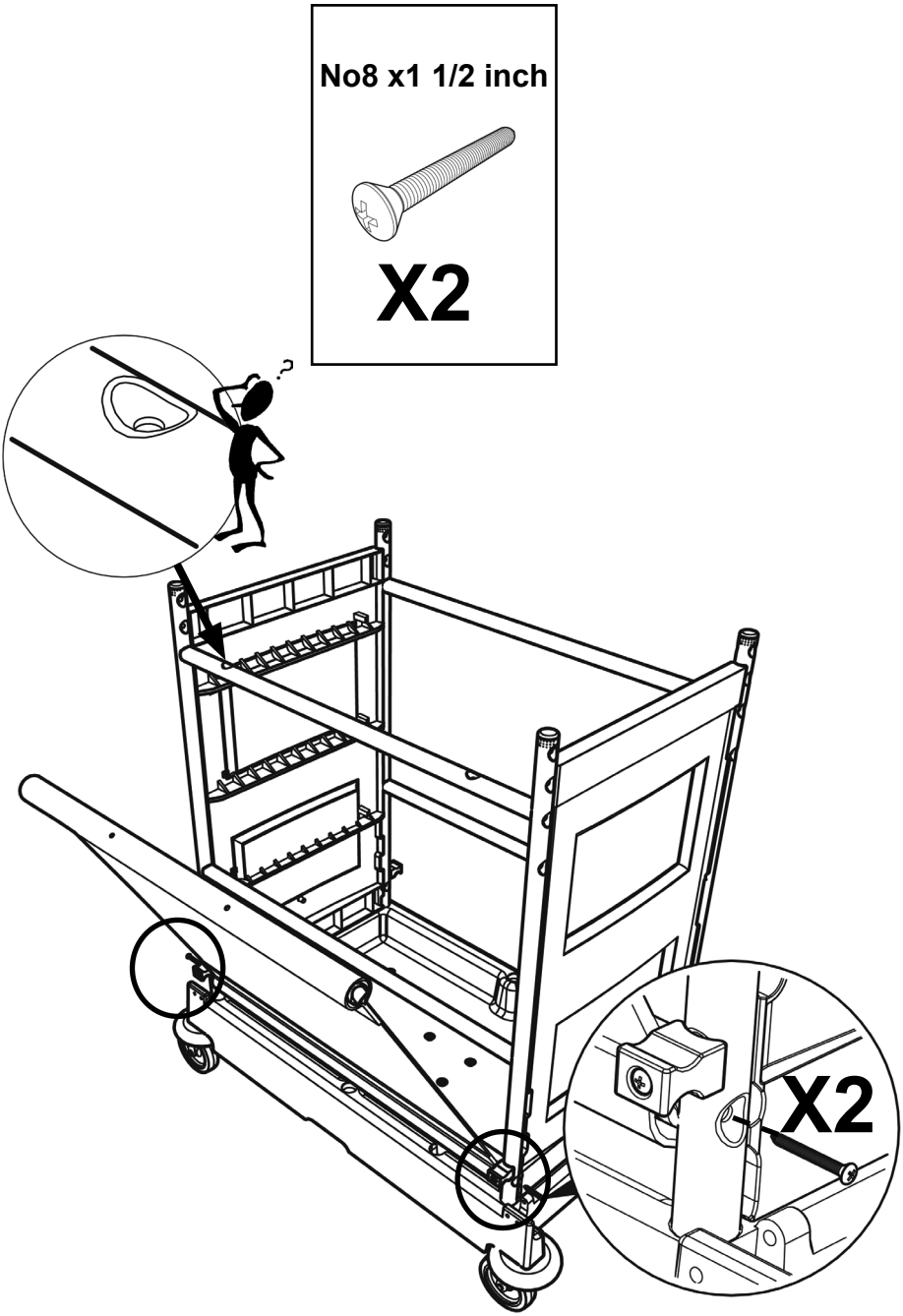
No8 x1 1/2 inch
X2
X2

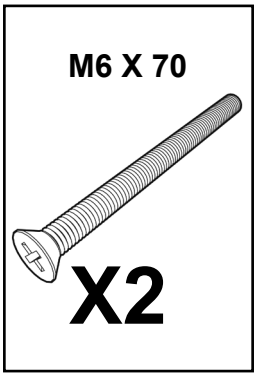
M6 X 70
X2

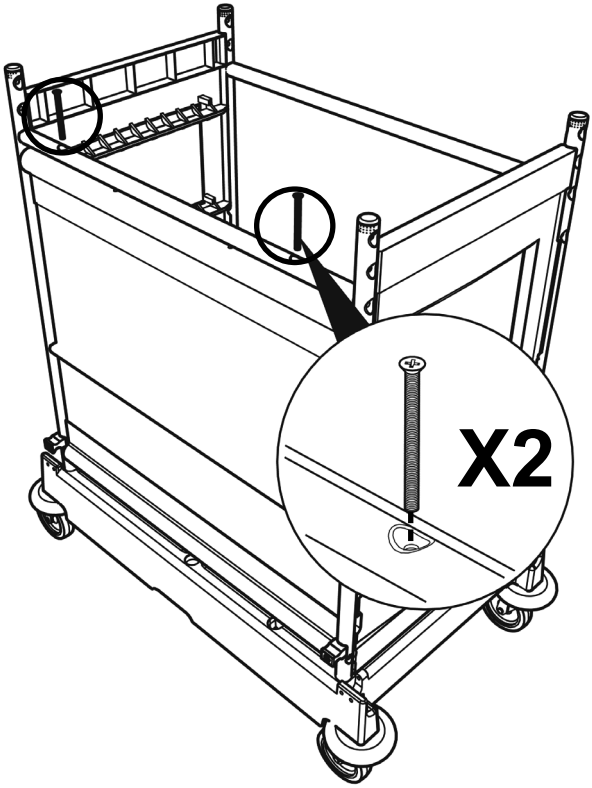
X2

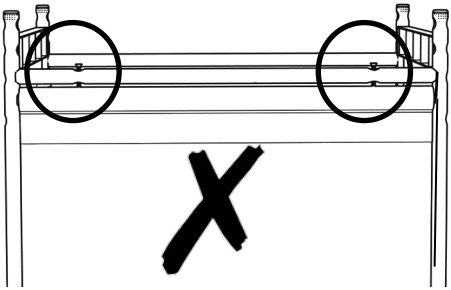

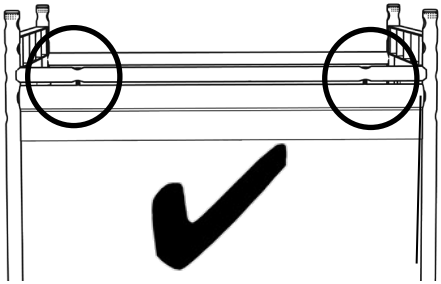

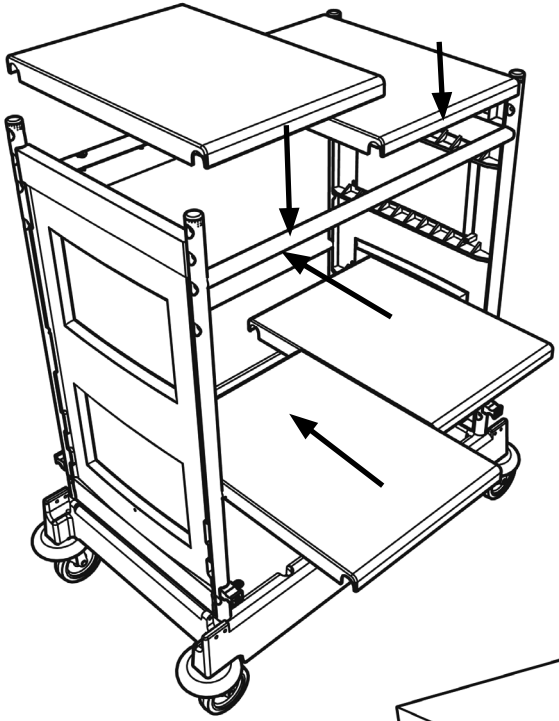

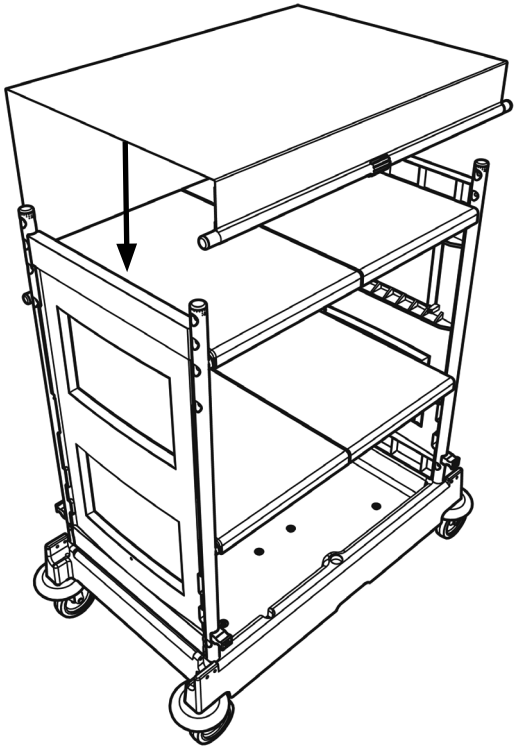



No8 x1 1/2 inch

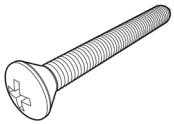

X2

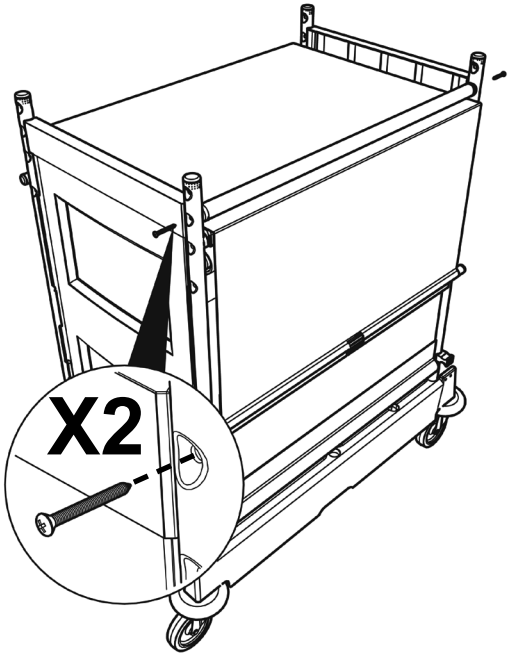

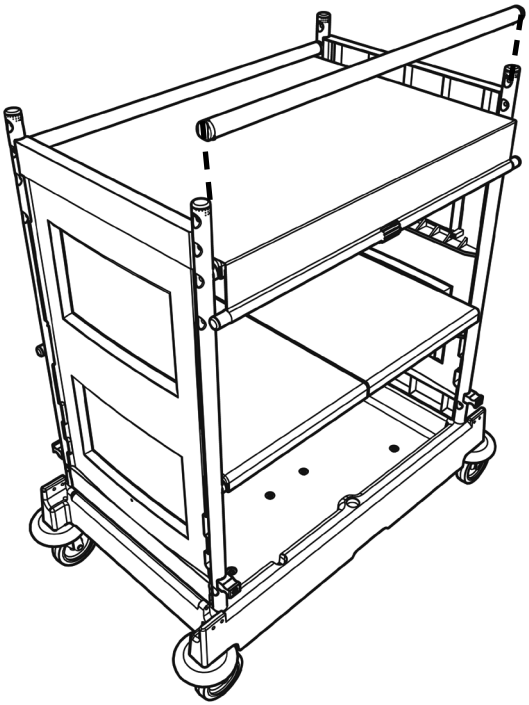

No8 x1 1/2 inch

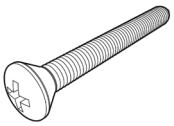

X2

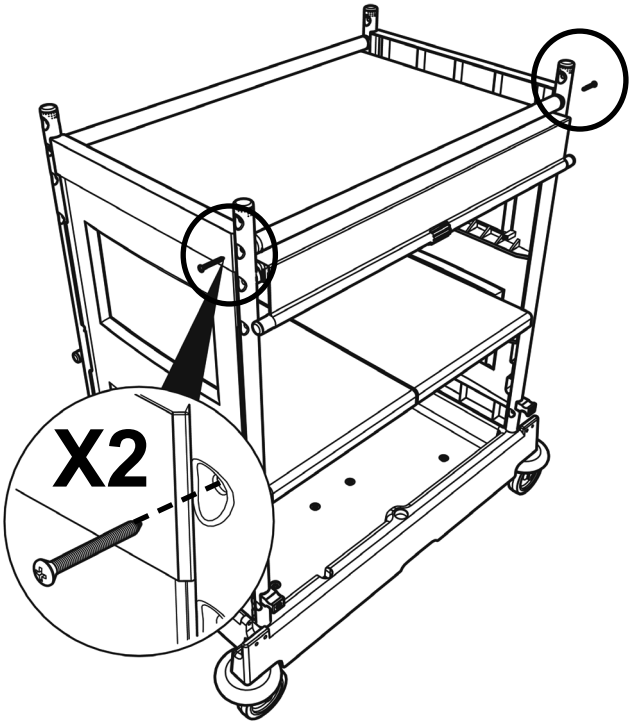

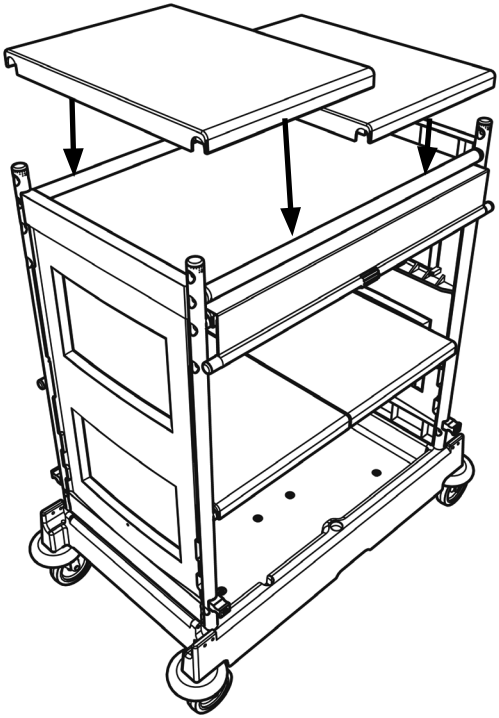

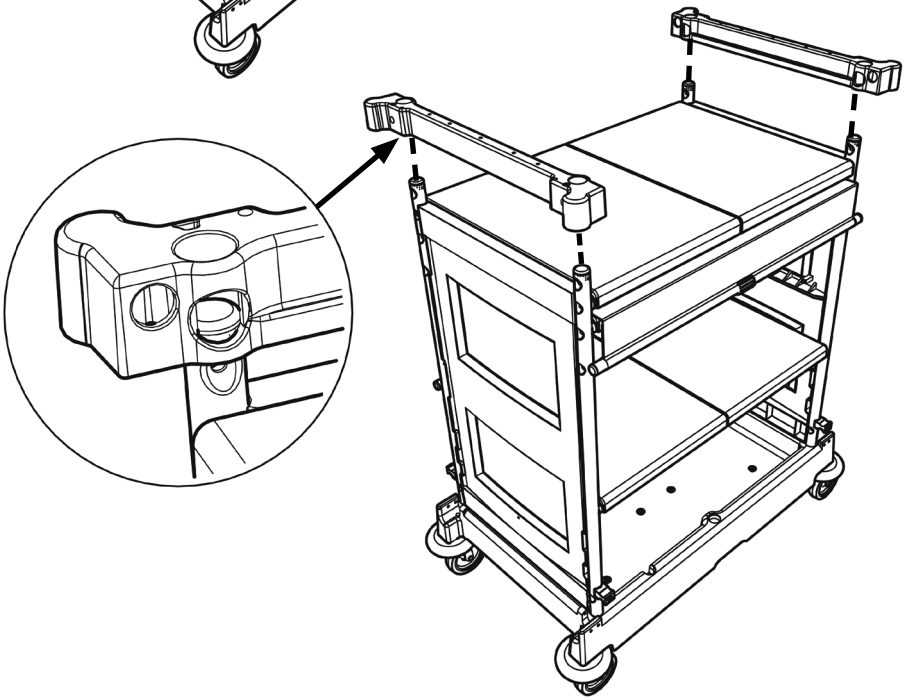

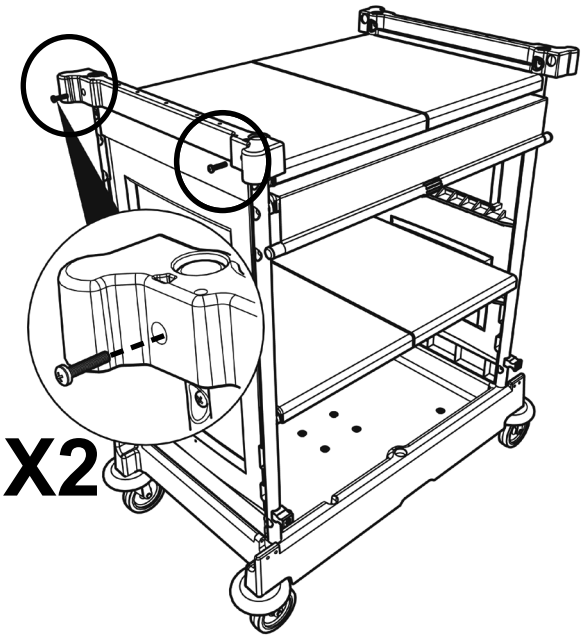

X2

M5 X 25

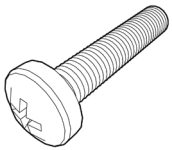

X4

NKT0- LLR

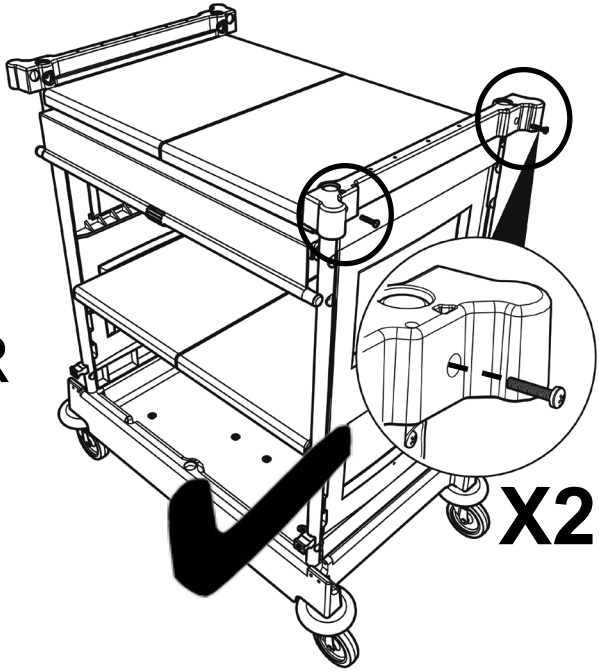

X2

NKT1/2 LLR

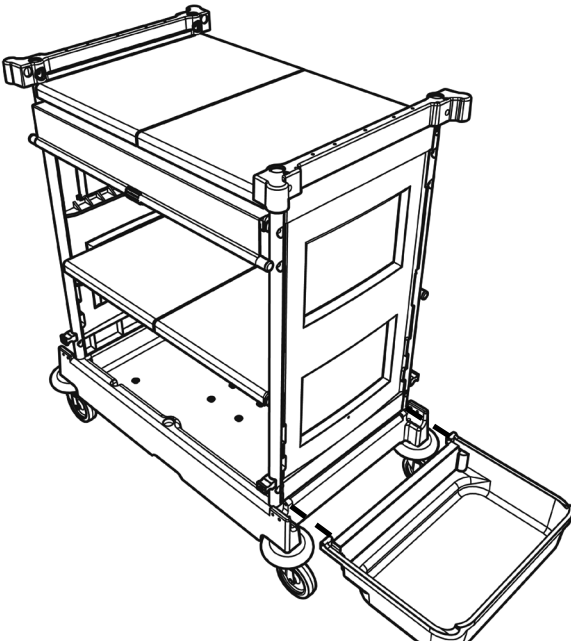

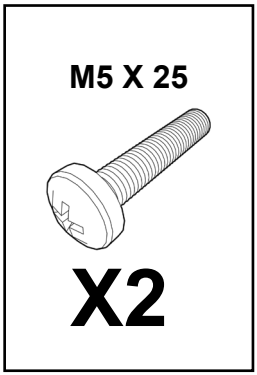

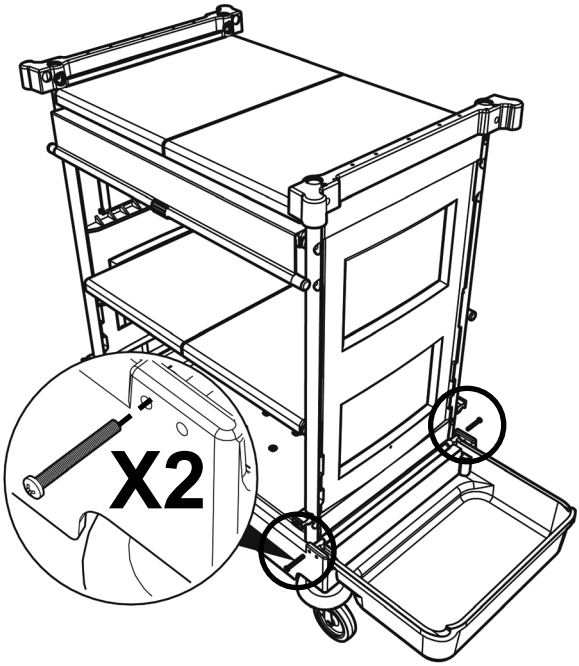

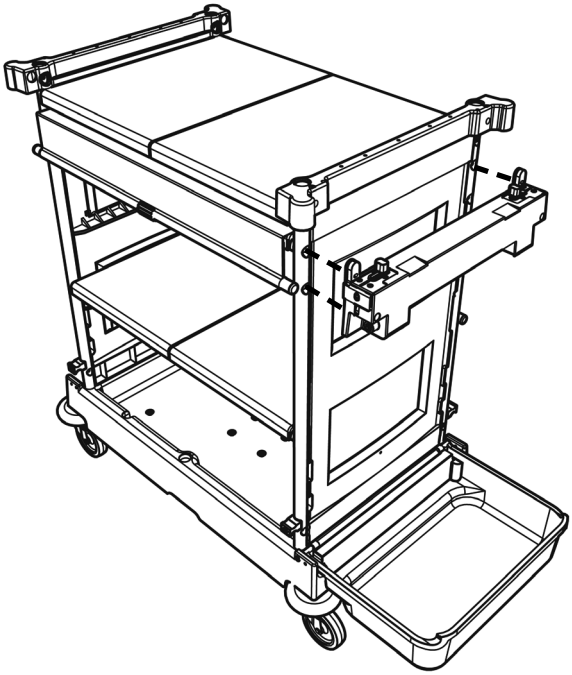

904520
M5 x 30

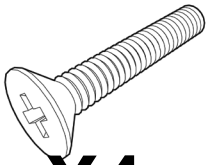

X4

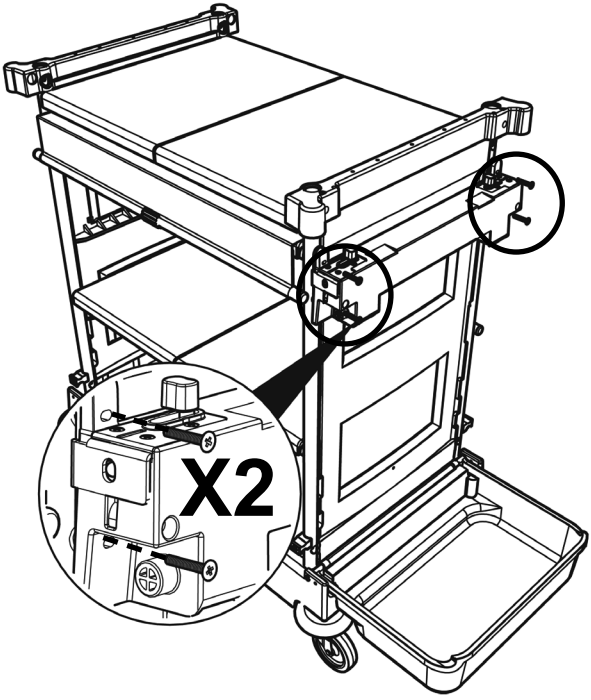

NKT1/2 LLR

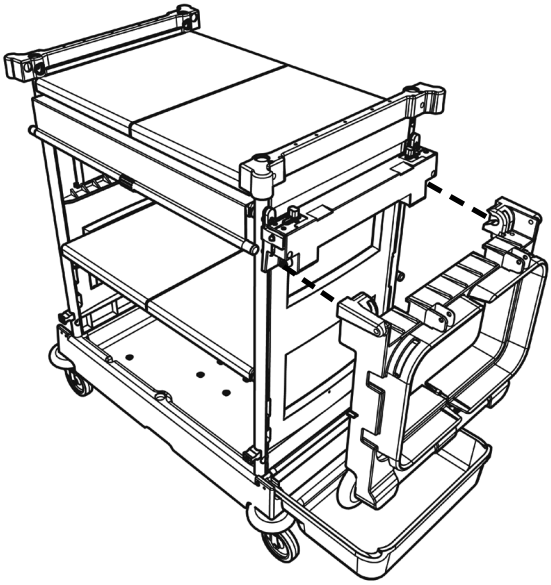

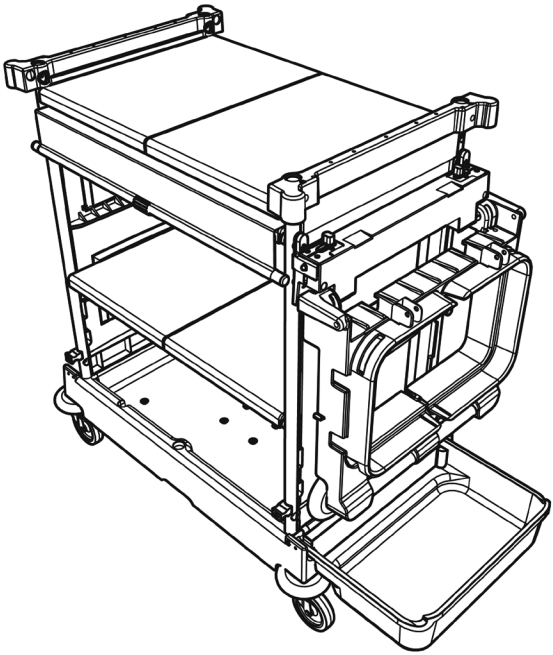

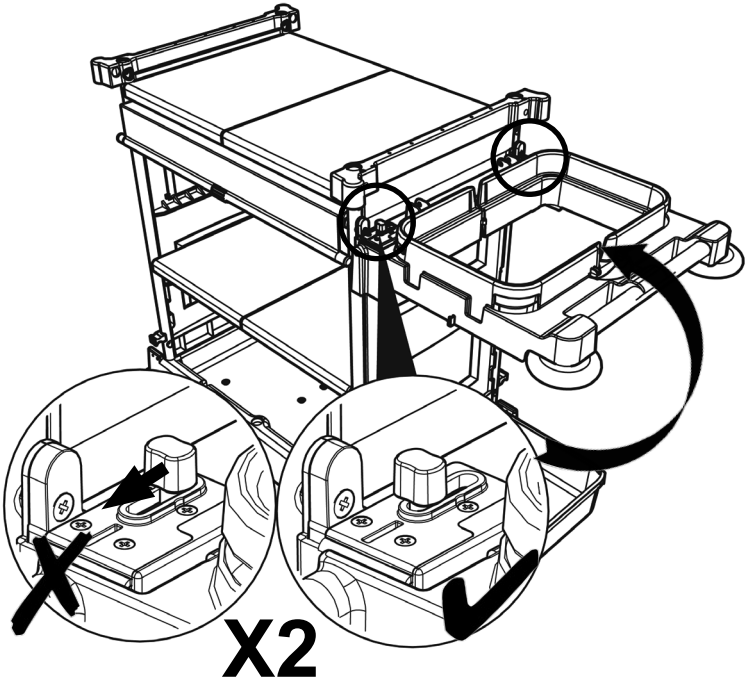
X2

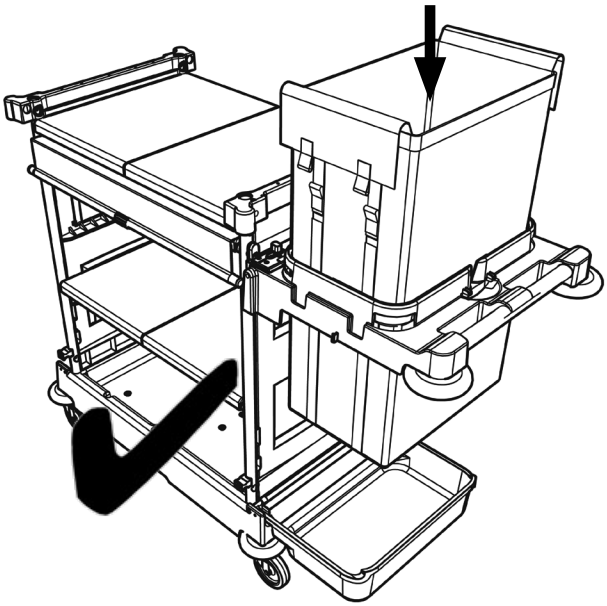

NKT2 LLR

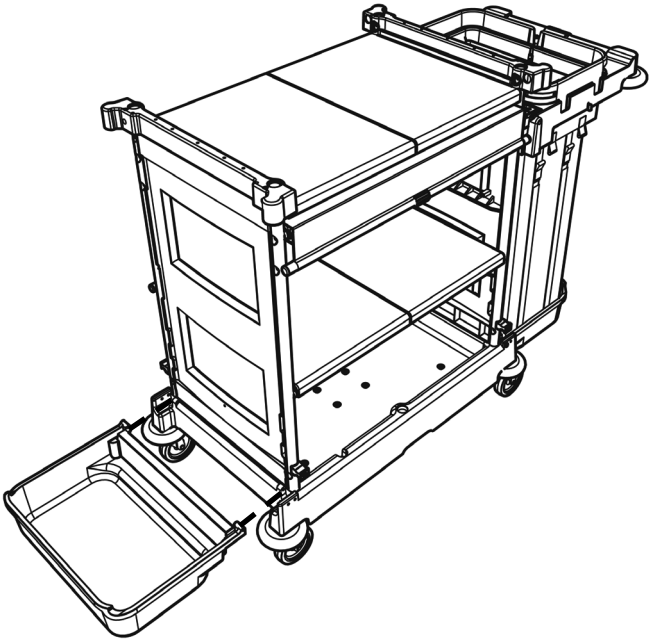

M5 X 25

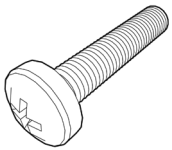

X2

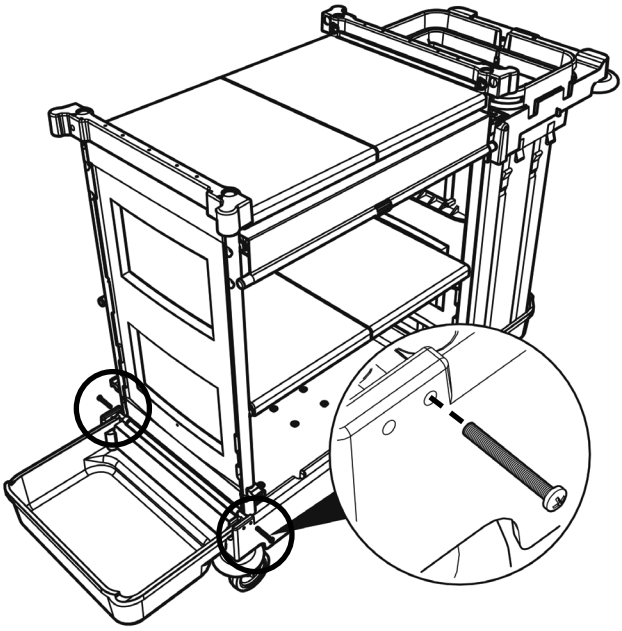

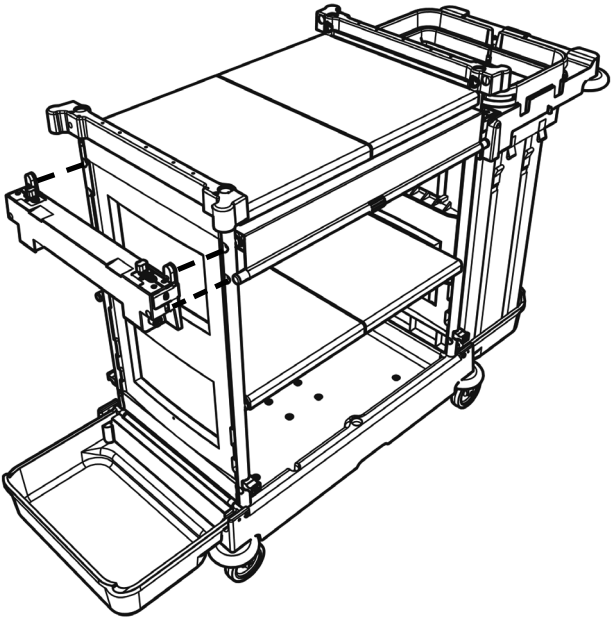

M5 x 30

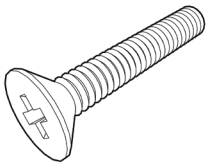

X4

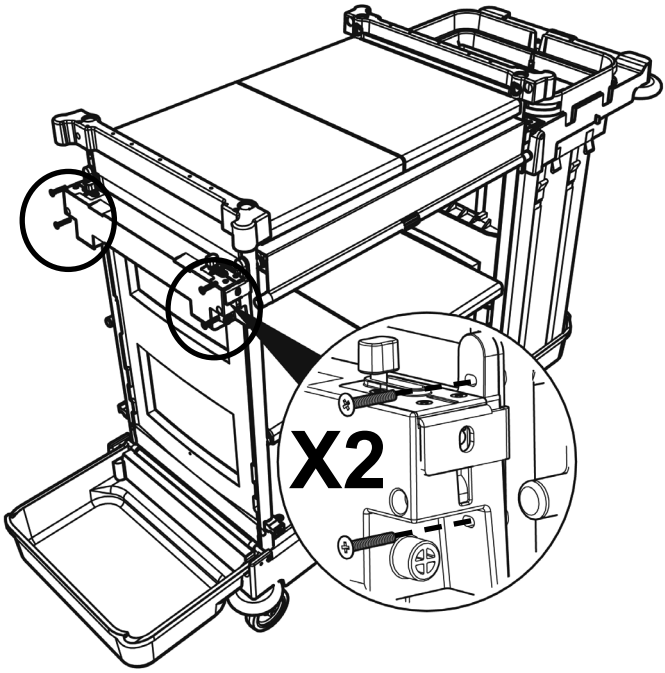

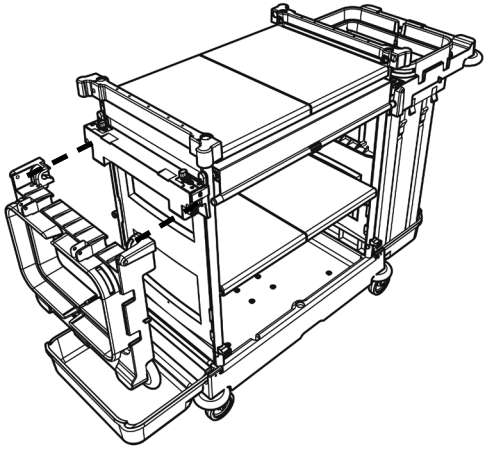

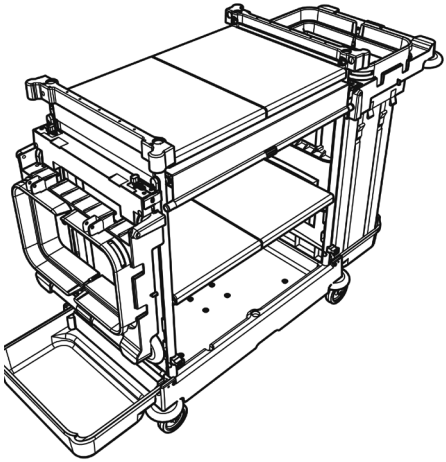

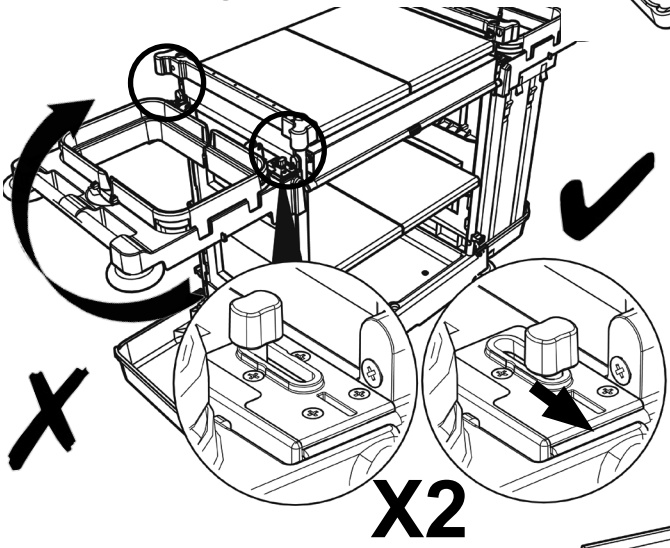

X2

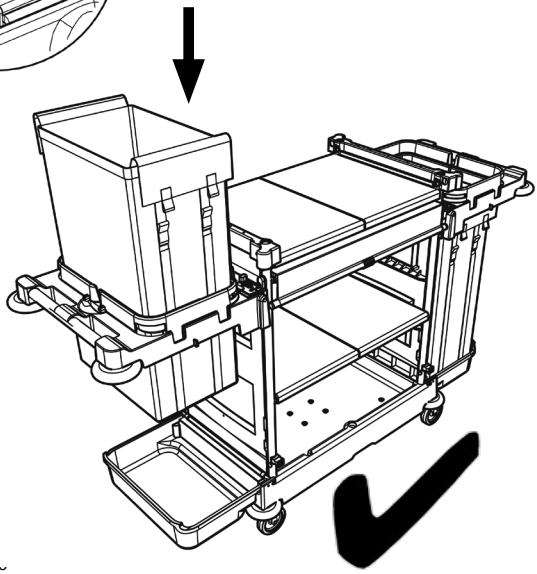

Numatic International Limited (Head Office)
Chard, Somerset TA20 2GB, UNITED KINGDOM
Tel: 01460 68600 numatic.com

Numatic International GmbH
Fränkische Straße 15-19, 30455 Hannover,
DEUTSCHLAND Tel: +49 (0) 511 984 2160 numatic.de

Numatic International Denmark
Fränkische Straße 15-19, 30455 Hannover, DEUTSCHLAND
Tel: +45 (0) 316 40808 numatic-online.dk

Numatic International S.A.S
13/17 rue du Valengelier, EAE la Tuilerie, 77500 Chelles, FRANCE
Tel: +33 (0) 164 726 161 numatic.fr

Numatic International BV
Vennootsweg 15, 2404 CG, Alphen aan den Rijn, NEDERLAND
Tel: +31 (0) 172 467 999 numatic.nl

Numatic International Schweiz AG.
Sihlbruggstrasse 3A, 6340 Baar, SCHWEIZ
Tel: +41 (0) 41 768 0760 numatic.ch

Numatic International (PTY) Ltd.
Cnr. 16th & Pharmaceutical Road, Randjes Park,
Midrand 1685, SOUTH AFRICA
Tel: +27 (0) 861 686 284 numatic.co.za

Numatic International ULDA
Rua Francisco da Silva Duarte, nº79,
4475-269 Santa Maria de Avioso, Castêlo da Maia, PORTUGAL
Tel: +351 220 047 700 numatic.pt

Numatic International Spain, S.L.U.
Av. Baix Llobregat, 5-7, Oficina bajos 1 (Parc Negocis Mas Blau II)
08820 El Prat de Llobregat (Barcelona), SPAIN
Tel: +34 93 647 22 22 numatic.es

Numatic International Italy S.R.L
Via Luigi Galvani, 2, Z.I. Talponedo, 33080 Porcia (PN), ITALY
Tel: +39 (0) 434 046 211 numatic.it

Edco, Edgar Edmondson Pty Ltd
Head Office: PO Box 198, Marrickville, NSW 1475, AUSTRALIA
Delivery & Shipping Address
18 Garden St, Marrickville, NSW 2204, AUSTRALIA
Office Number: +61 (0)2 9557 4411, Fax Number: +61 (0)2 9519 9223,
Email: orders@edmondson.net.au ABN: 27 000 450 144

Proquip NZ Ltd
7a Peterkin Street, Taita, Lower Hutt, 5019
Tel: +64 4 566 7847, Fax: +64 4 576 0430
Web: www.proquipnz.co.nz