NKS 1/2

Numatic

numatic.com

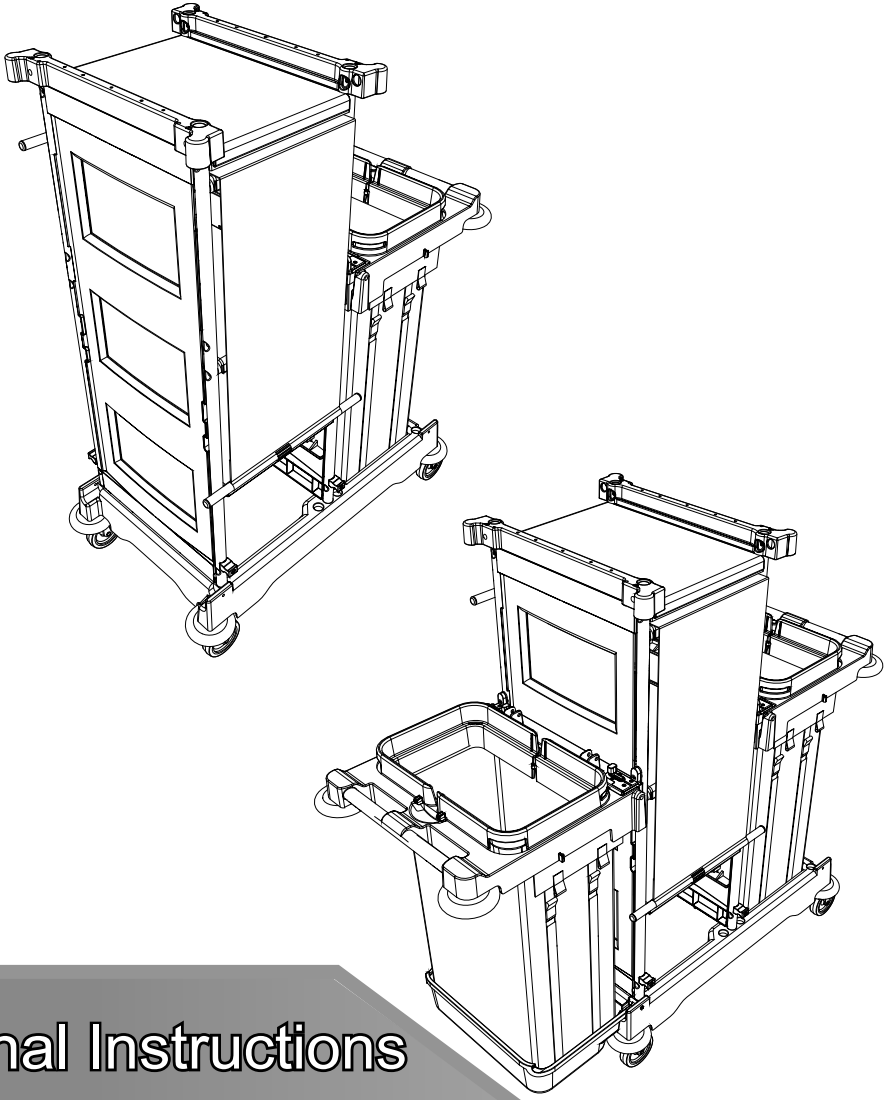

Original Instructions

NKS-1R/2R

8

9

4

6

5

3

7

2

11

15

1

14

12

13

NKS-2R

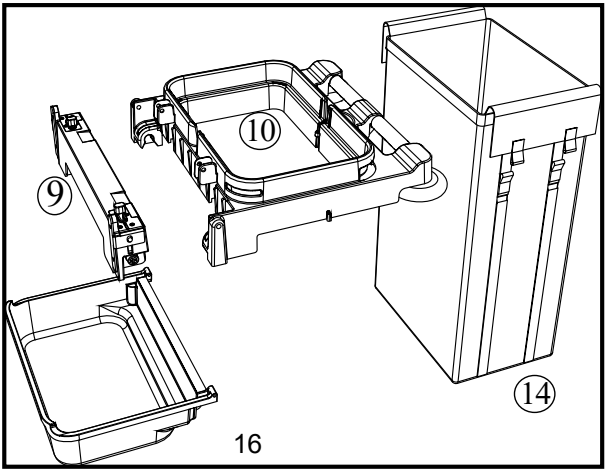

NKS-1R/2R

ITEM	DESCRIPTION	QTY
1	BASE	1
2	FRONT UPRIGHT FRAME	1
3	REAR UPRIGHT FRAME	1
4	SHELF	4
5	SHORT TIE BAR WITH HOLES	1
6	SHORT TIE BAR NO HOLES	3
7	REAR COVER	1
8	DOOR MOUNTING MOULDING	2
9	BAG SUPPORT FRAME MOUNTING	1
10	BAG SUPPORT FRAME ASSEMBLY	1
11	SLIDING COVER	1
12	COVER PULL TUBE	2
13	NUKEEPER SLIDING COVER DARK GREY	2
14	100LTR LAUNDRY BAG	1
15	PANEL MOULDING	2

NKS-2R

ITEM	DESCRIPTION	QTY
9	BAG SUPPORT FRAME MOUNTING	1
10	BAG SUPPORT FRAME ASSEMBLY	1
14	100LTR LAUNDRY BAG	1
16	BAG SUPPORT TRAY	1

NKS-1R/2R

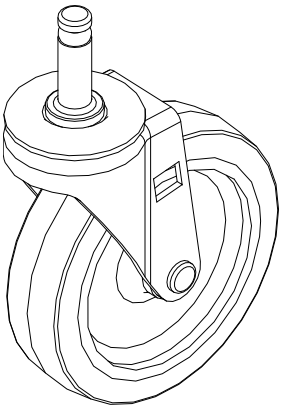

X 4

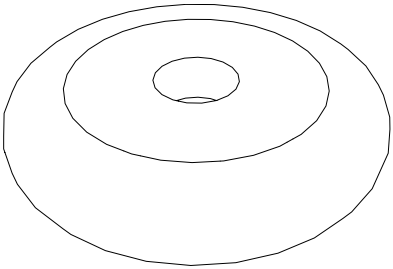

X 4

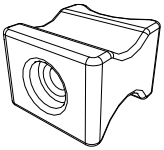

X 4

M8 25mm
Socket Bolt

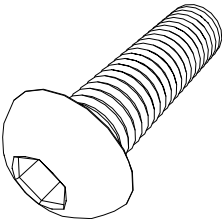

X 4

M8

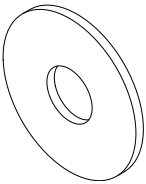

X 4

No8 X 1 1/2 INCH

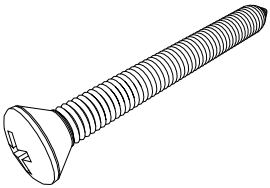

X 6

M6 X 70

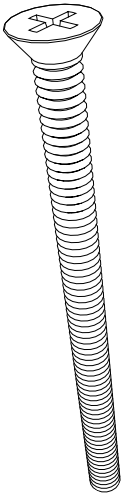

X 2

M5 X 25

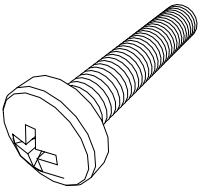

X 4

M5 X 30

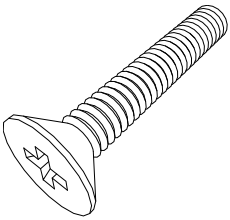

X 4

M5 X 40

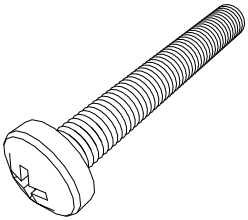

X 4

NKS-2R

M5 X 25

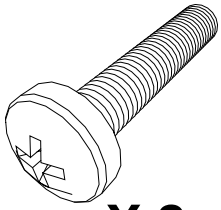

X 2

M5 X 30

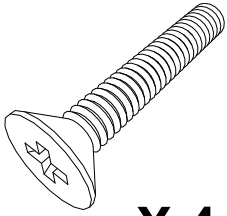

X 4

0.75 HR

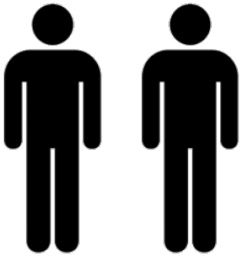

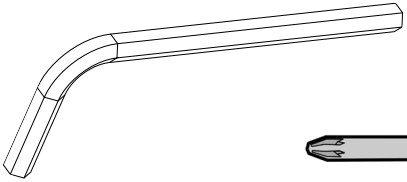

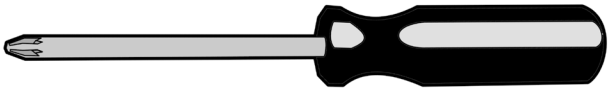

NKS-1R/2R

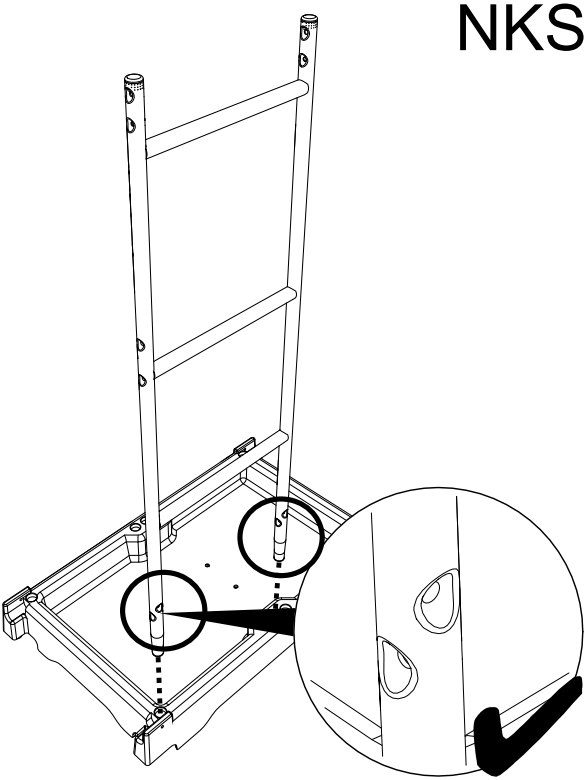

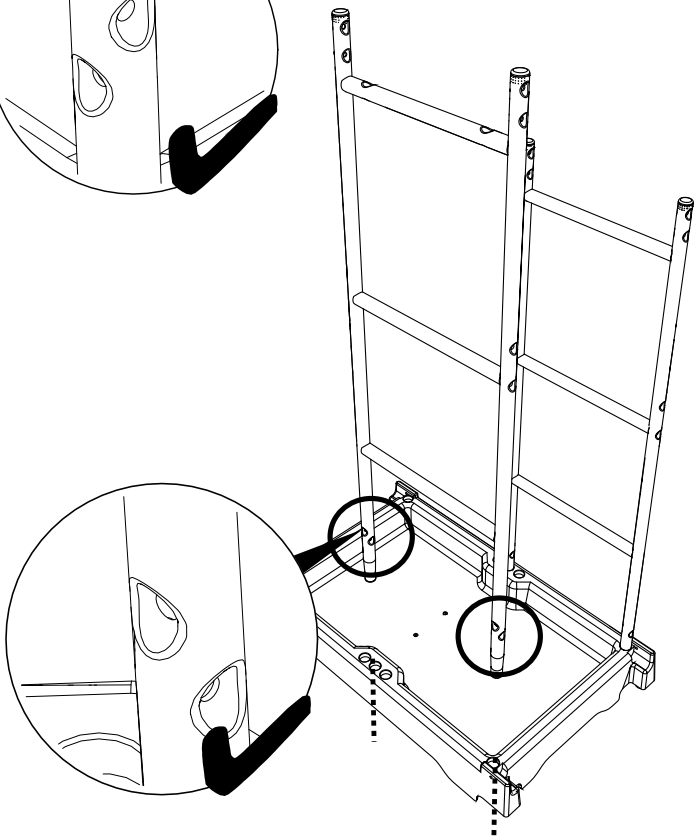

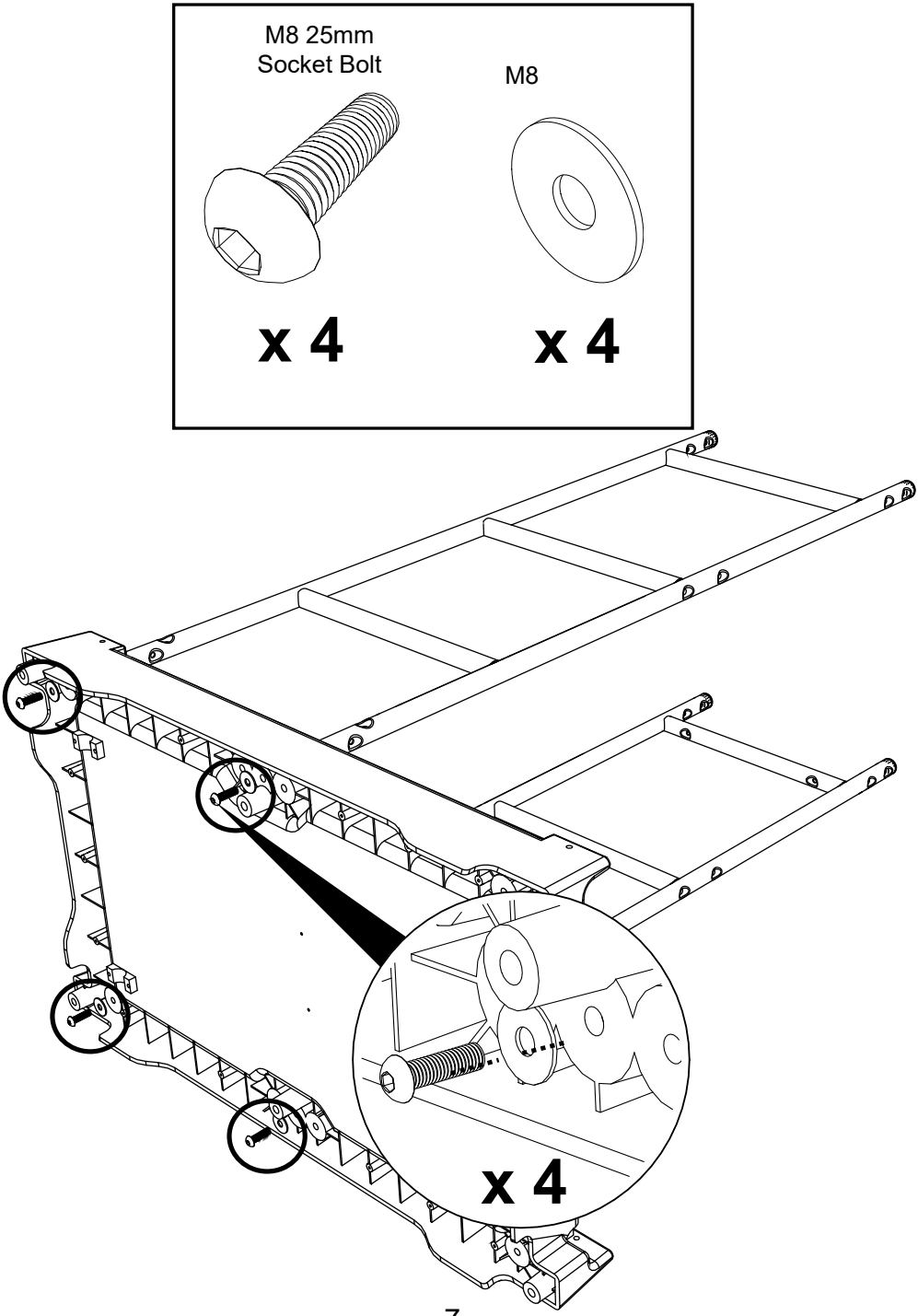
M8 25mm
Socket Bolt
x 4
M8
x 4
x 4

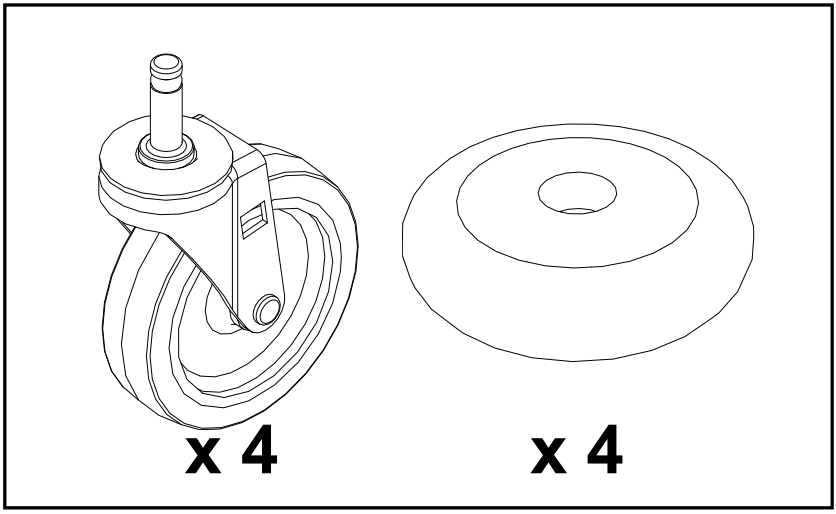
x 4
x 4

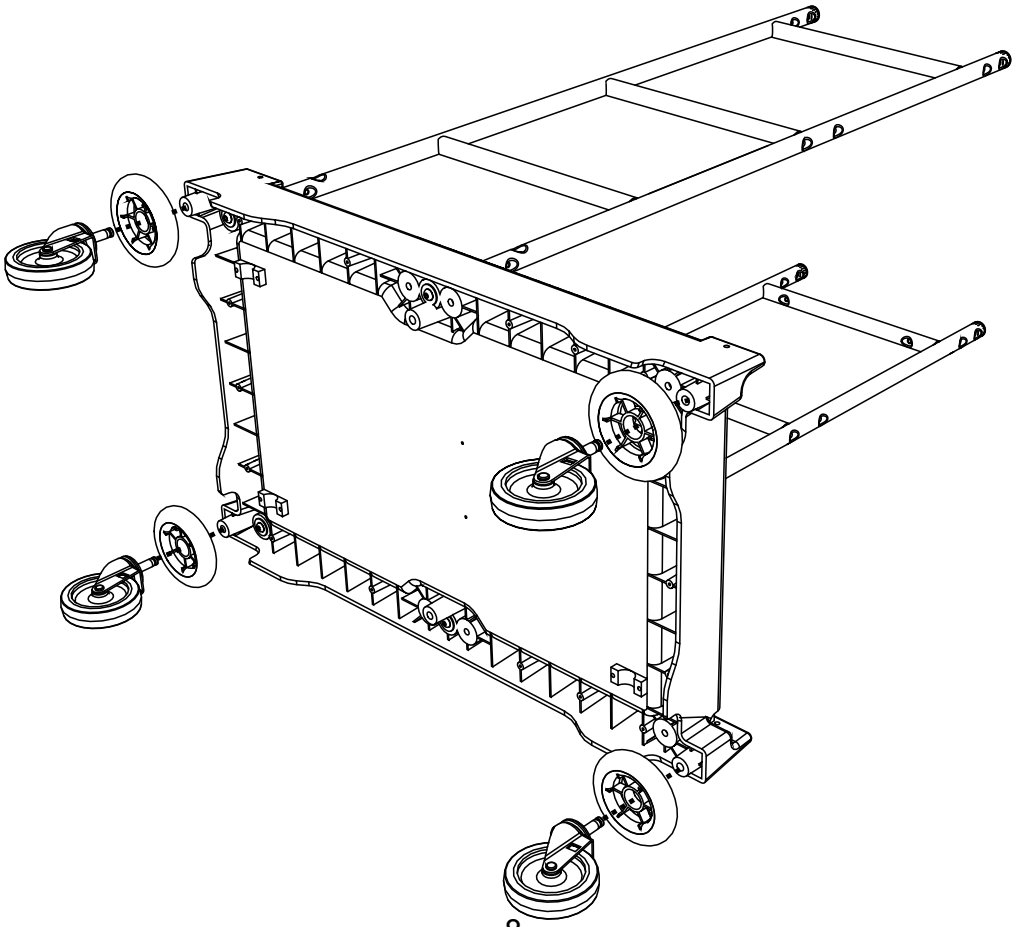

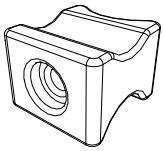

x 4

M5 X 40

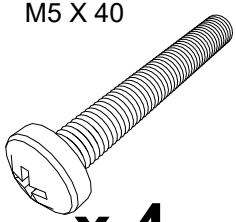

x 4

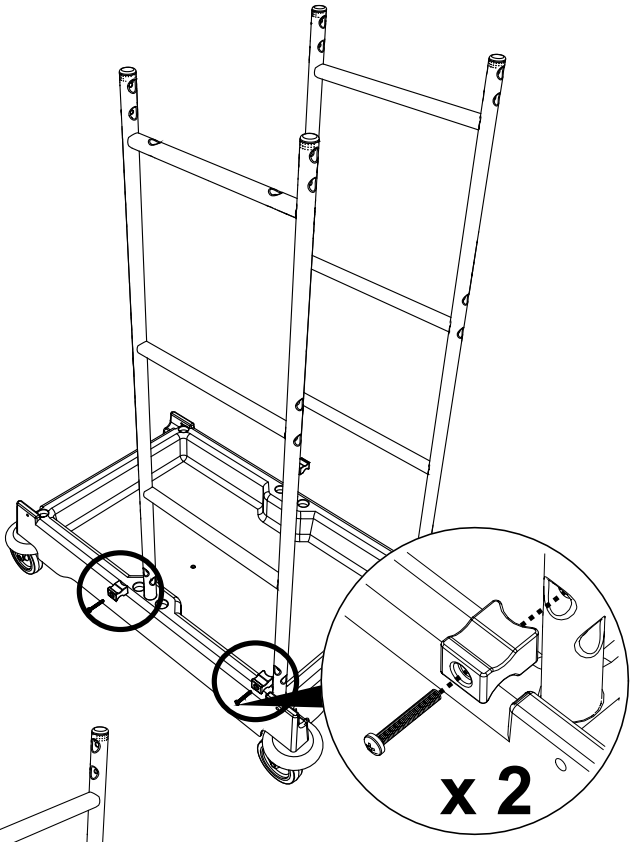

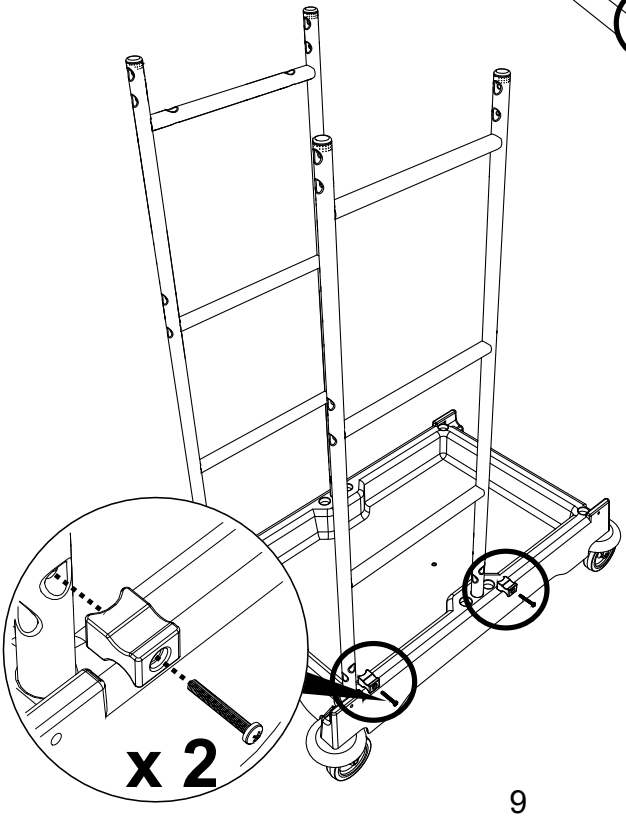

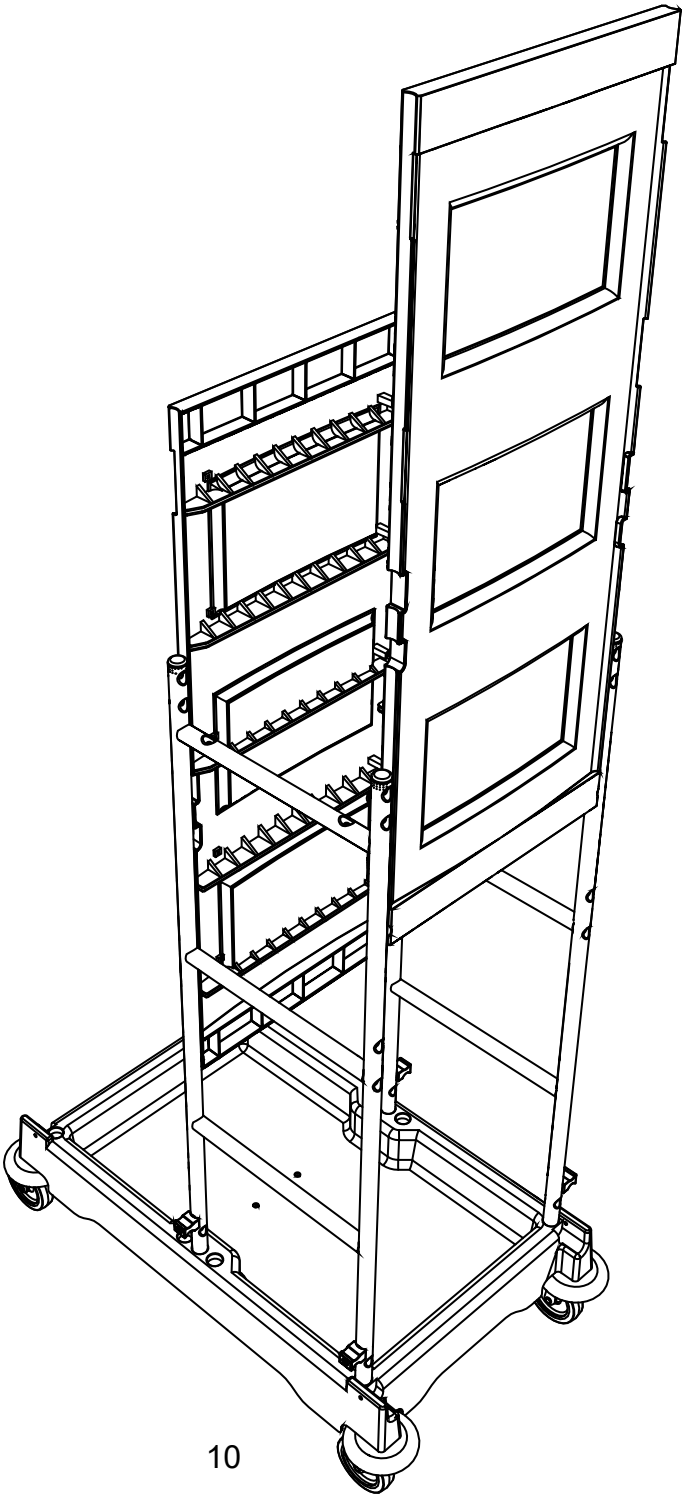

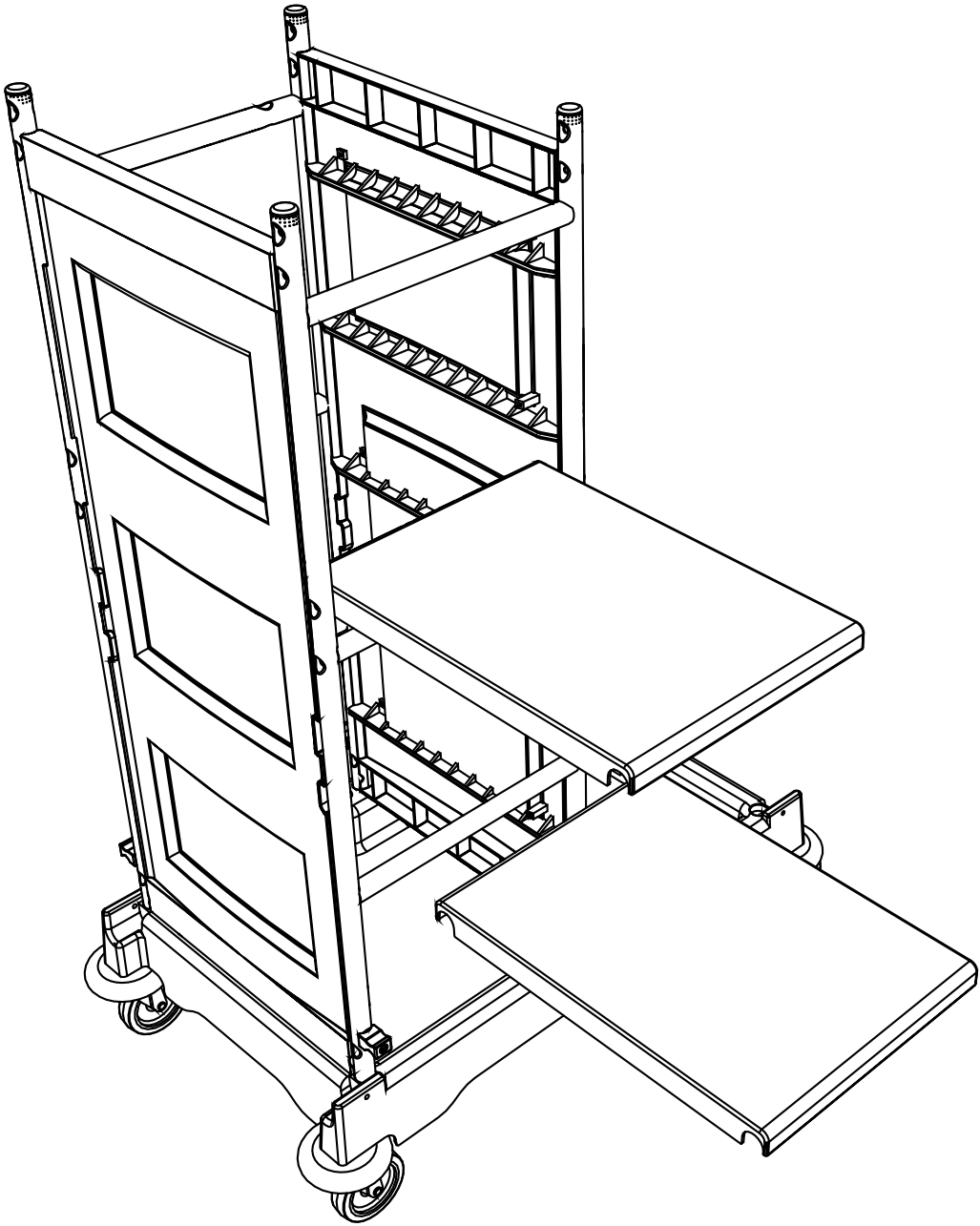

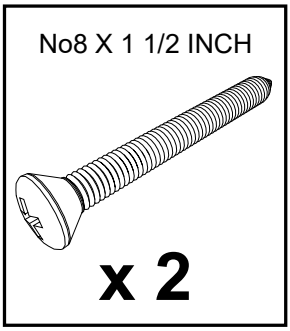
No8 X 1 1/2 INCH
x 2

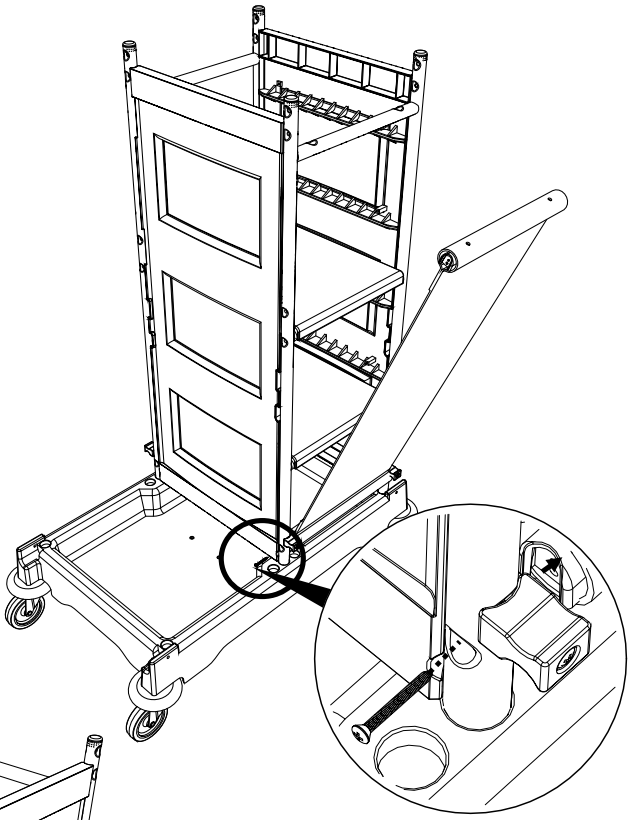

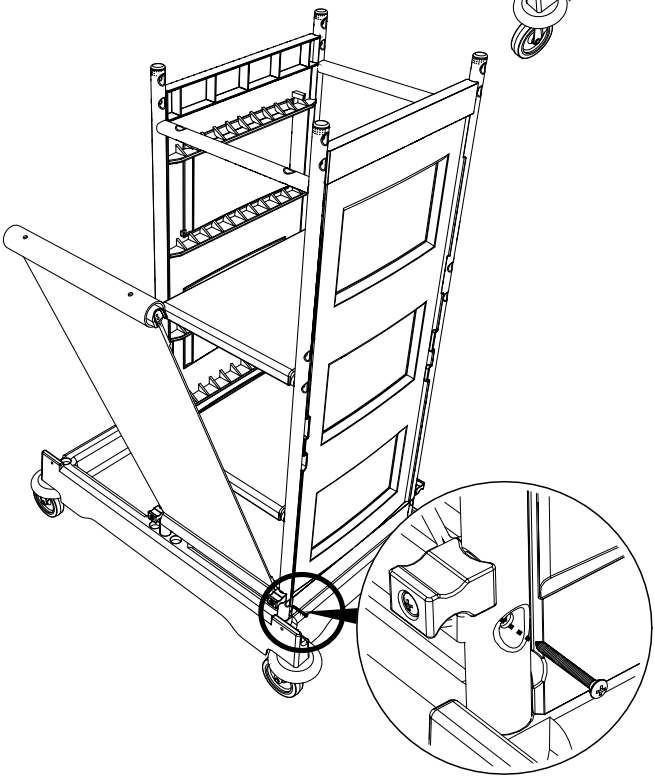

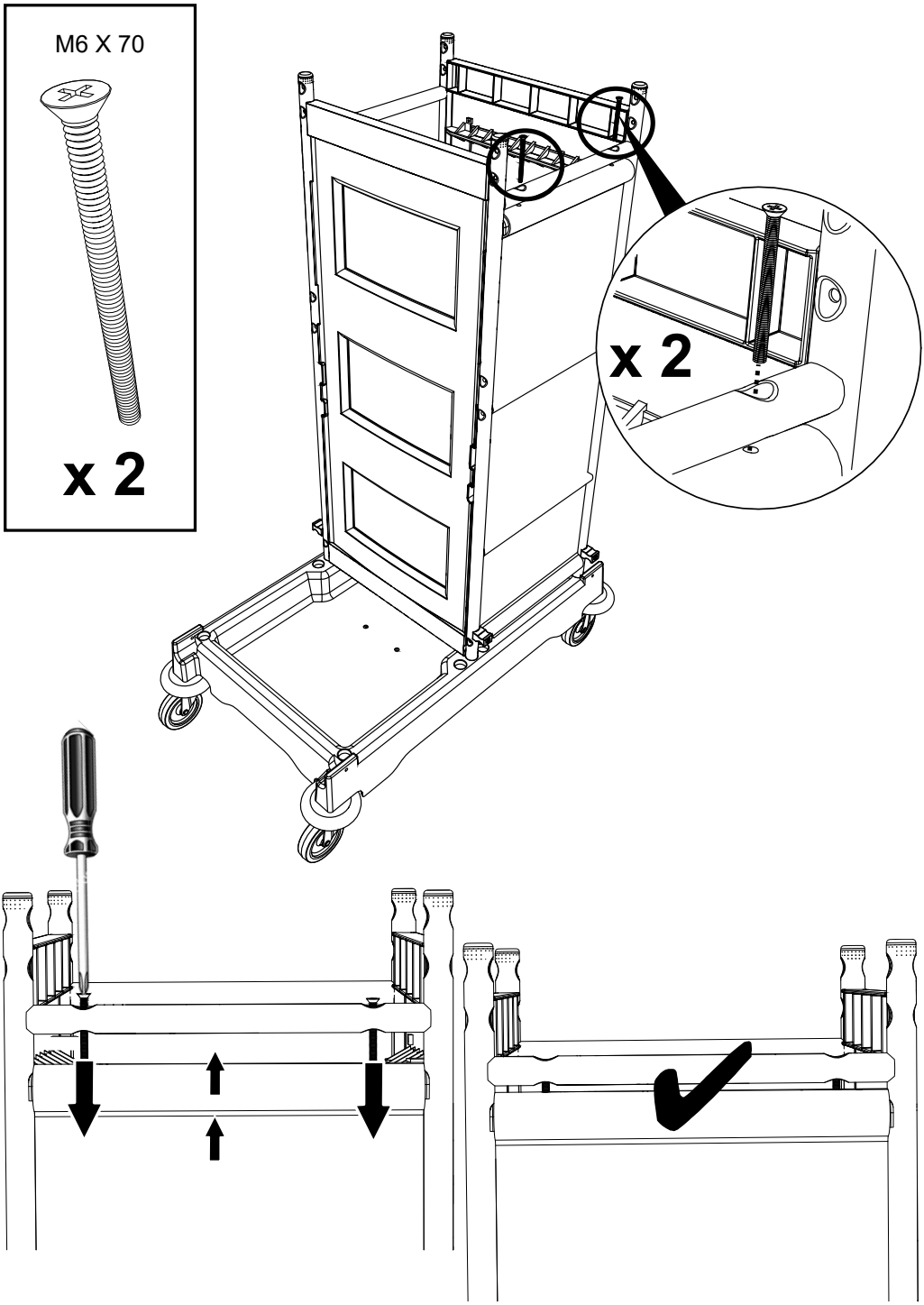
M6 X 70
x 2
x 2

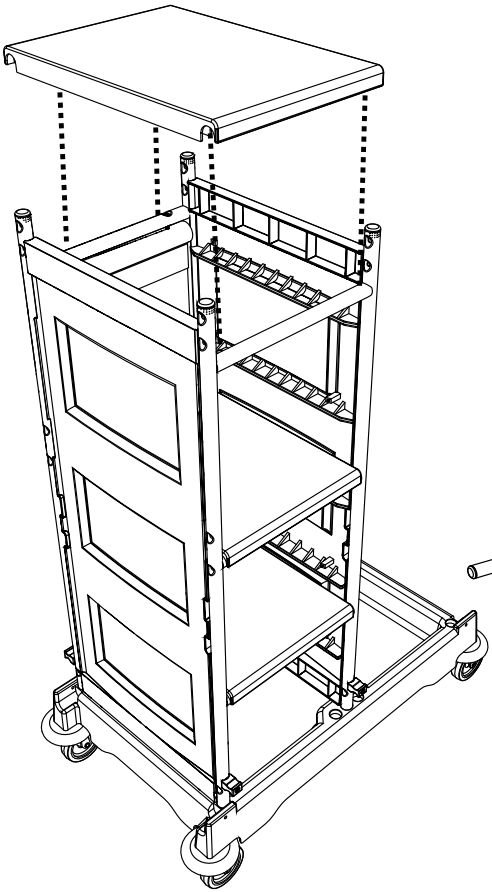

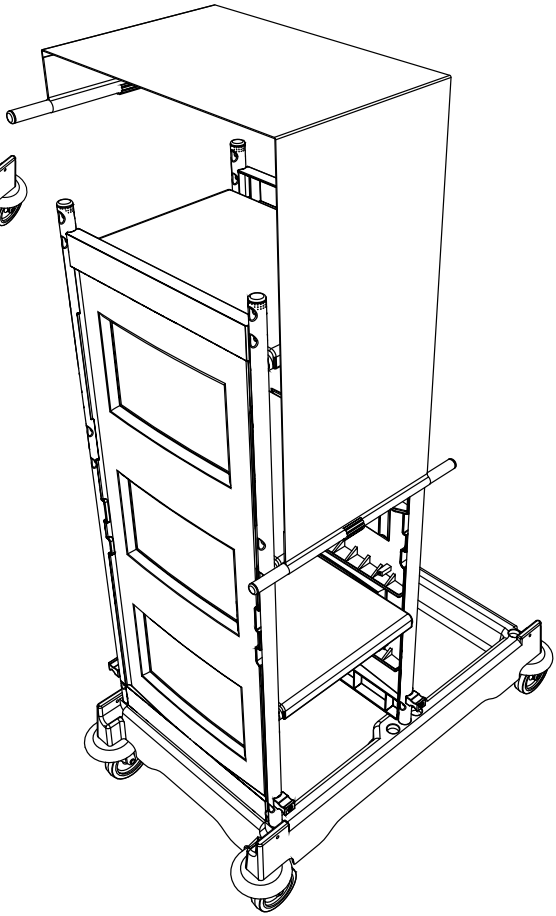

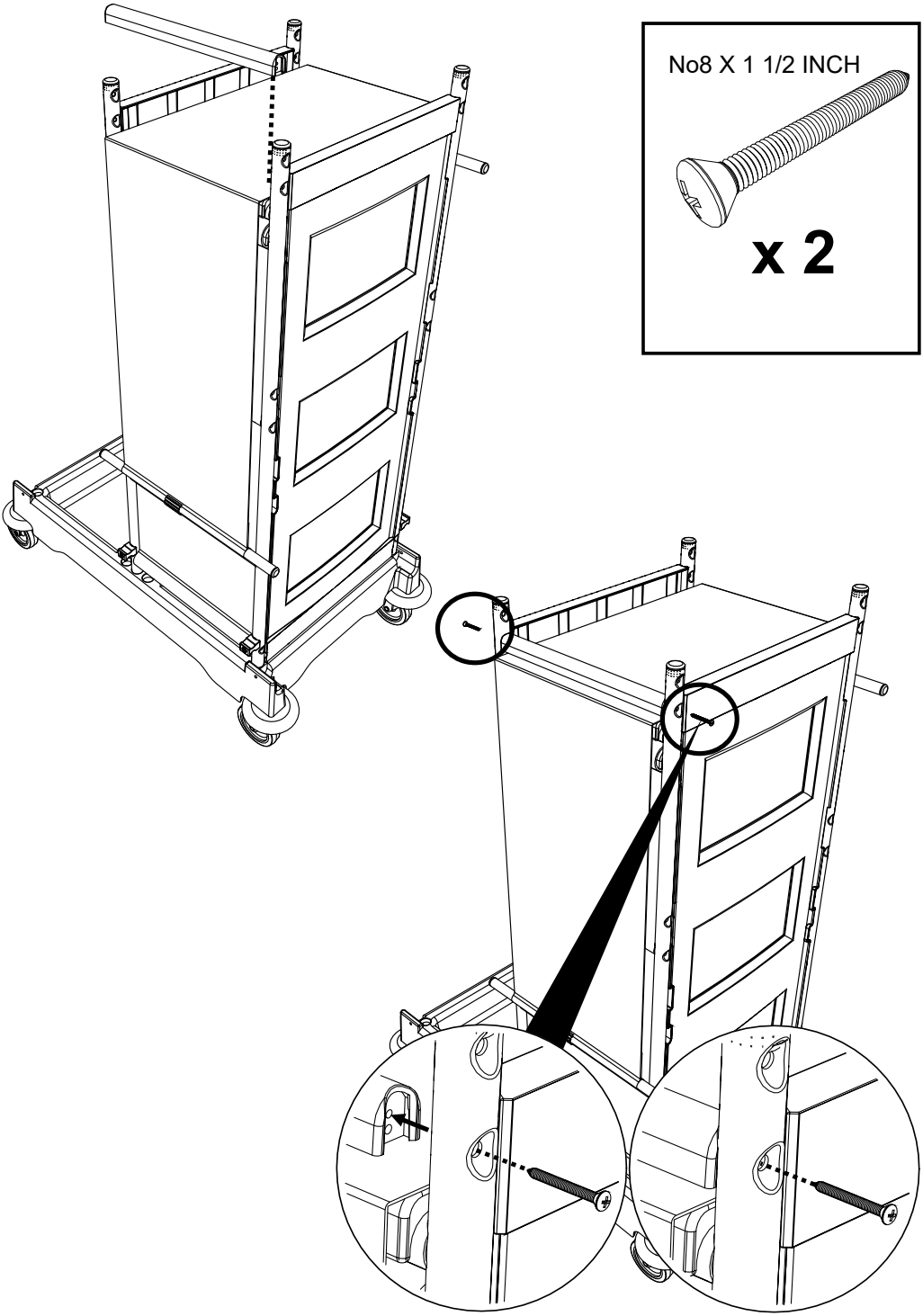
No8 X 1 1/2 INCH
x 2

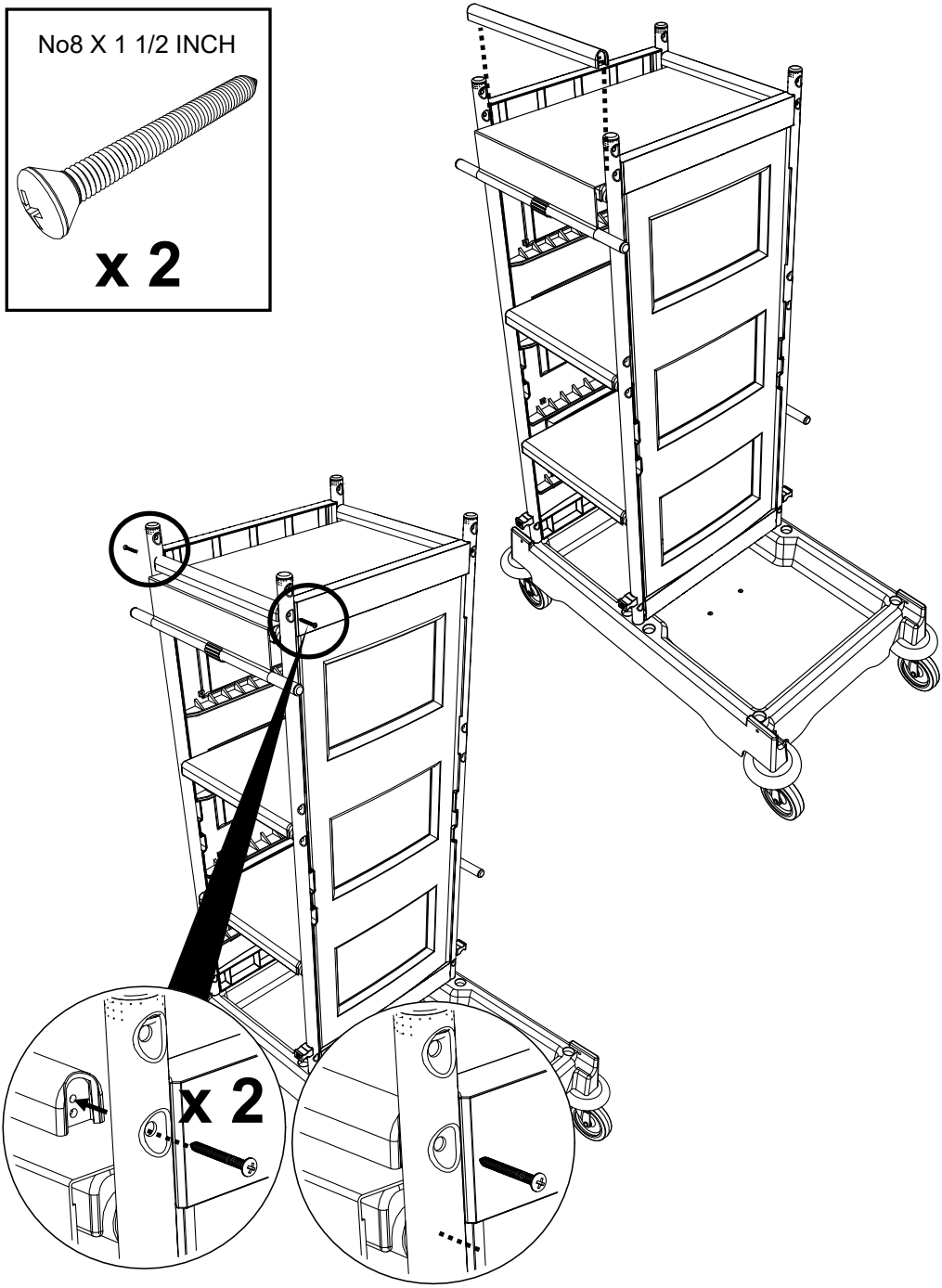
No8 X 1 1/2 INCH
x 2
x 2

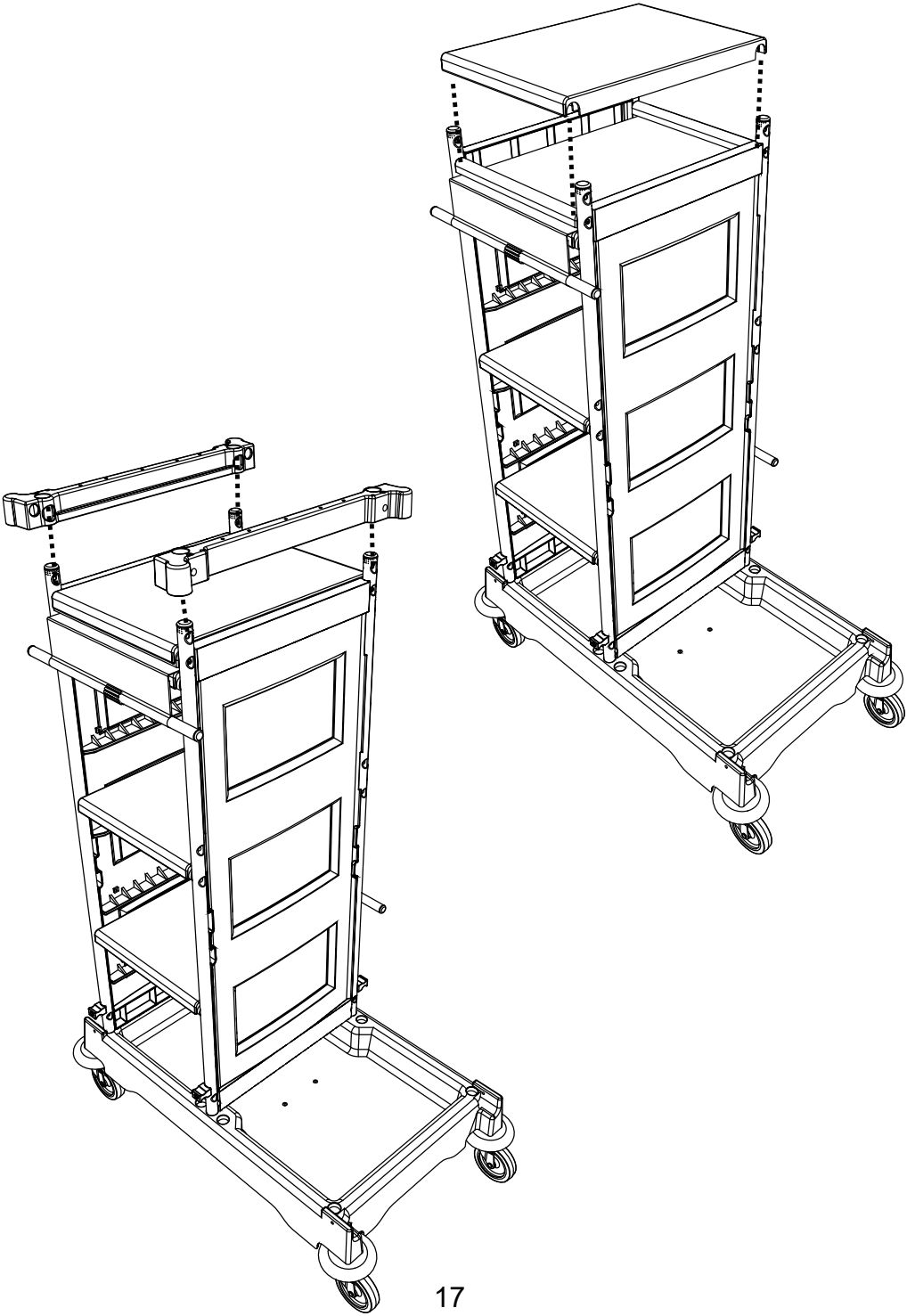

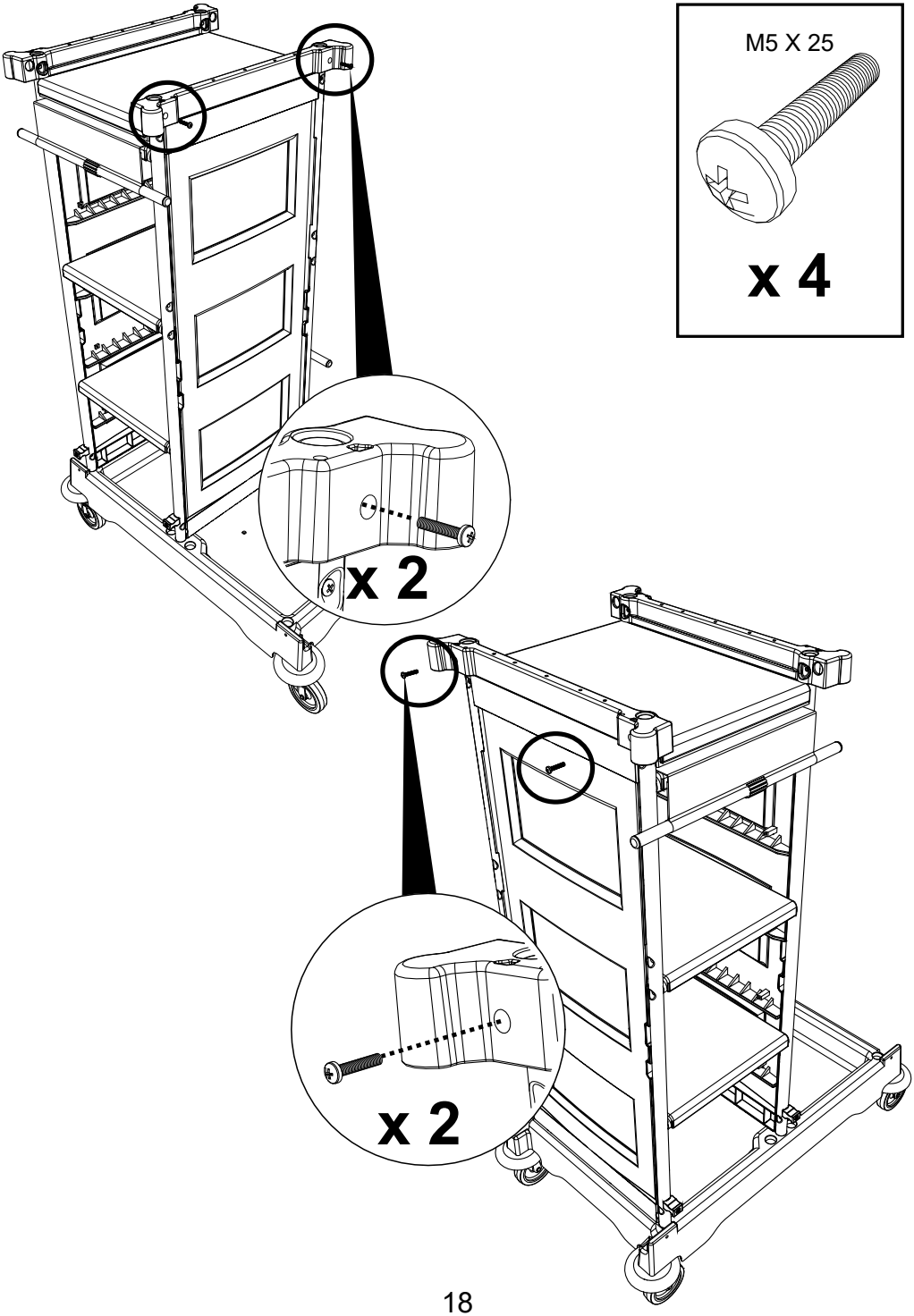
M5 X 25
x 4
x 2
x 2

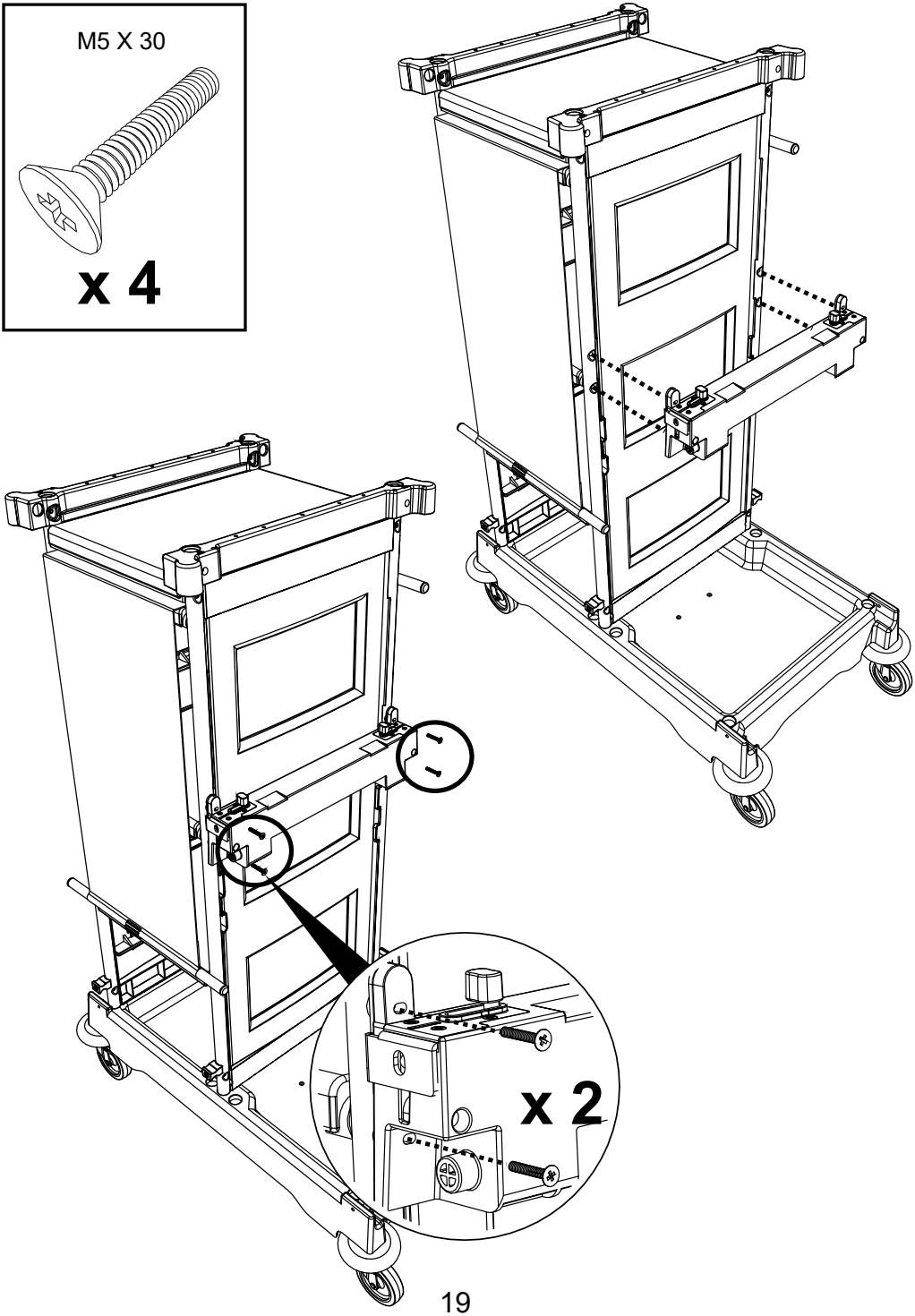
M5 X 30
x 4
x 2

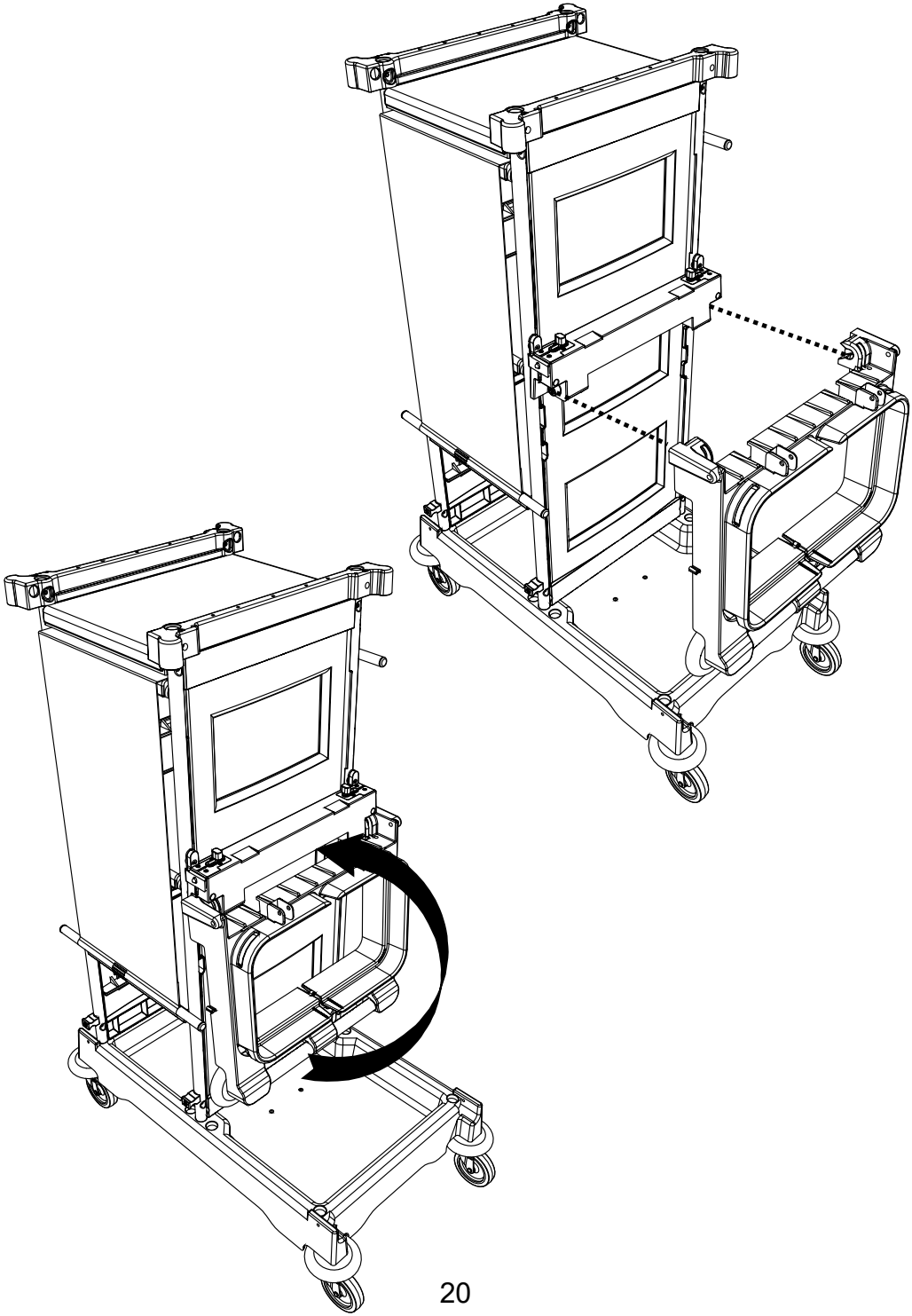

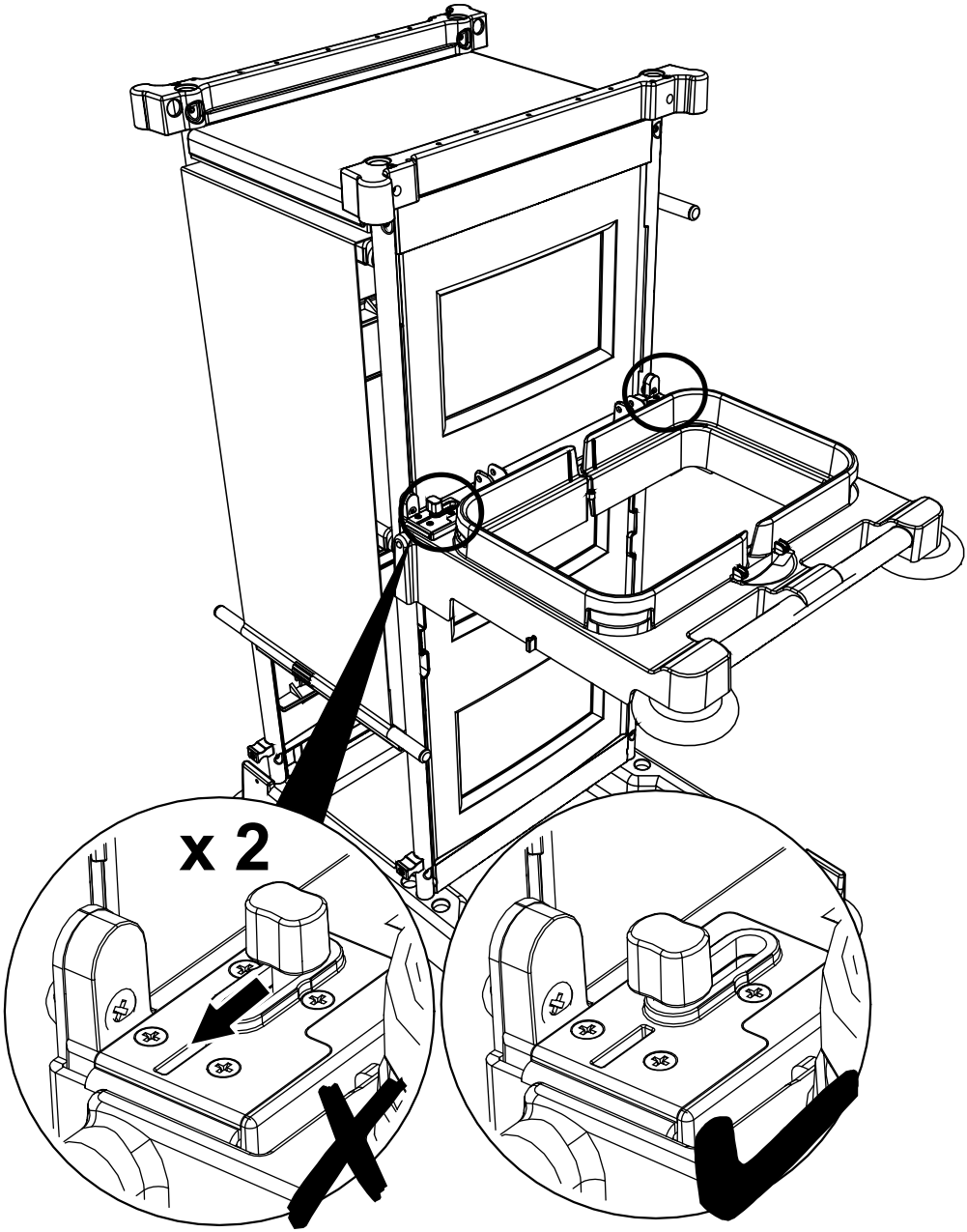
x 2

NKS-1R

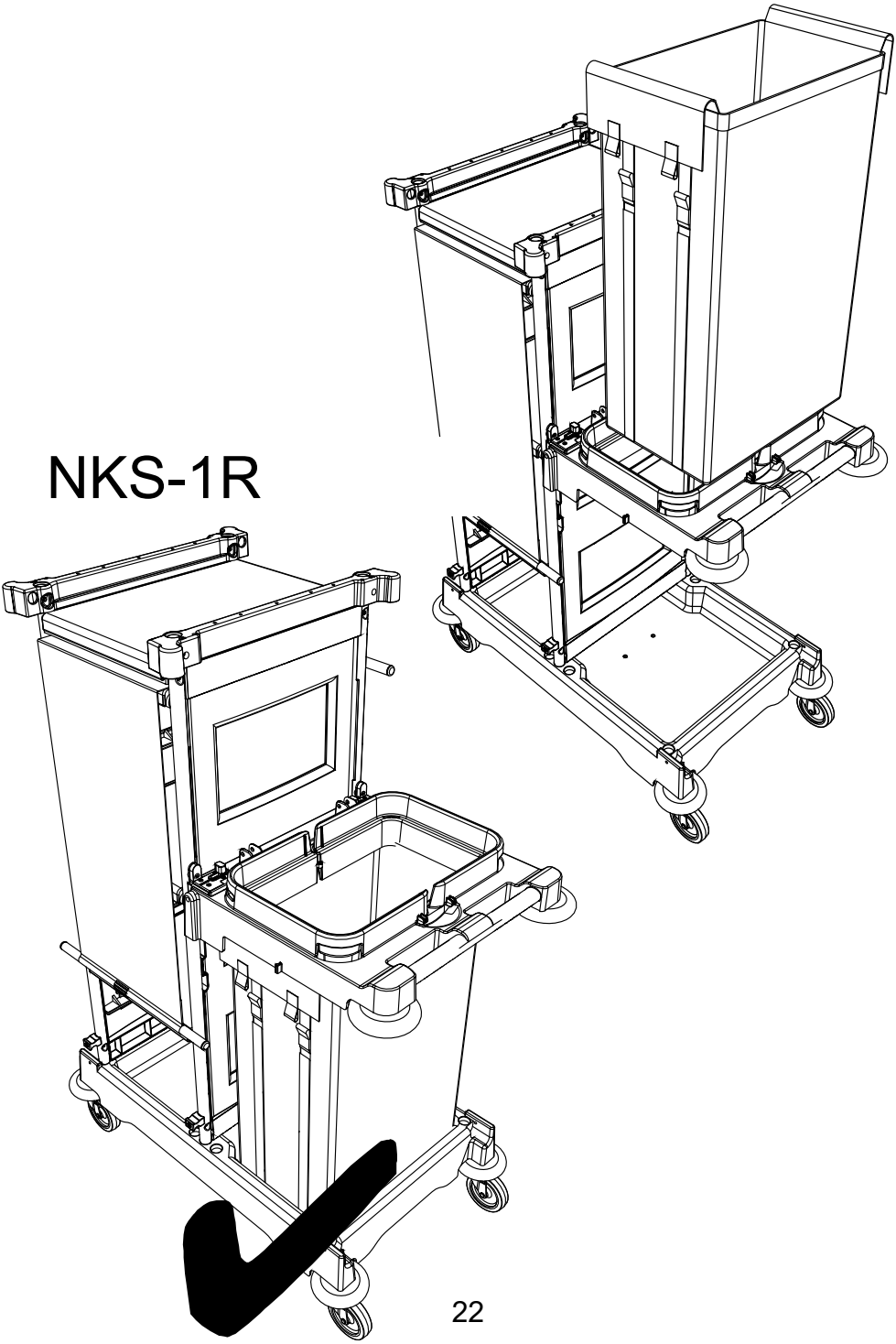

NKS-2R

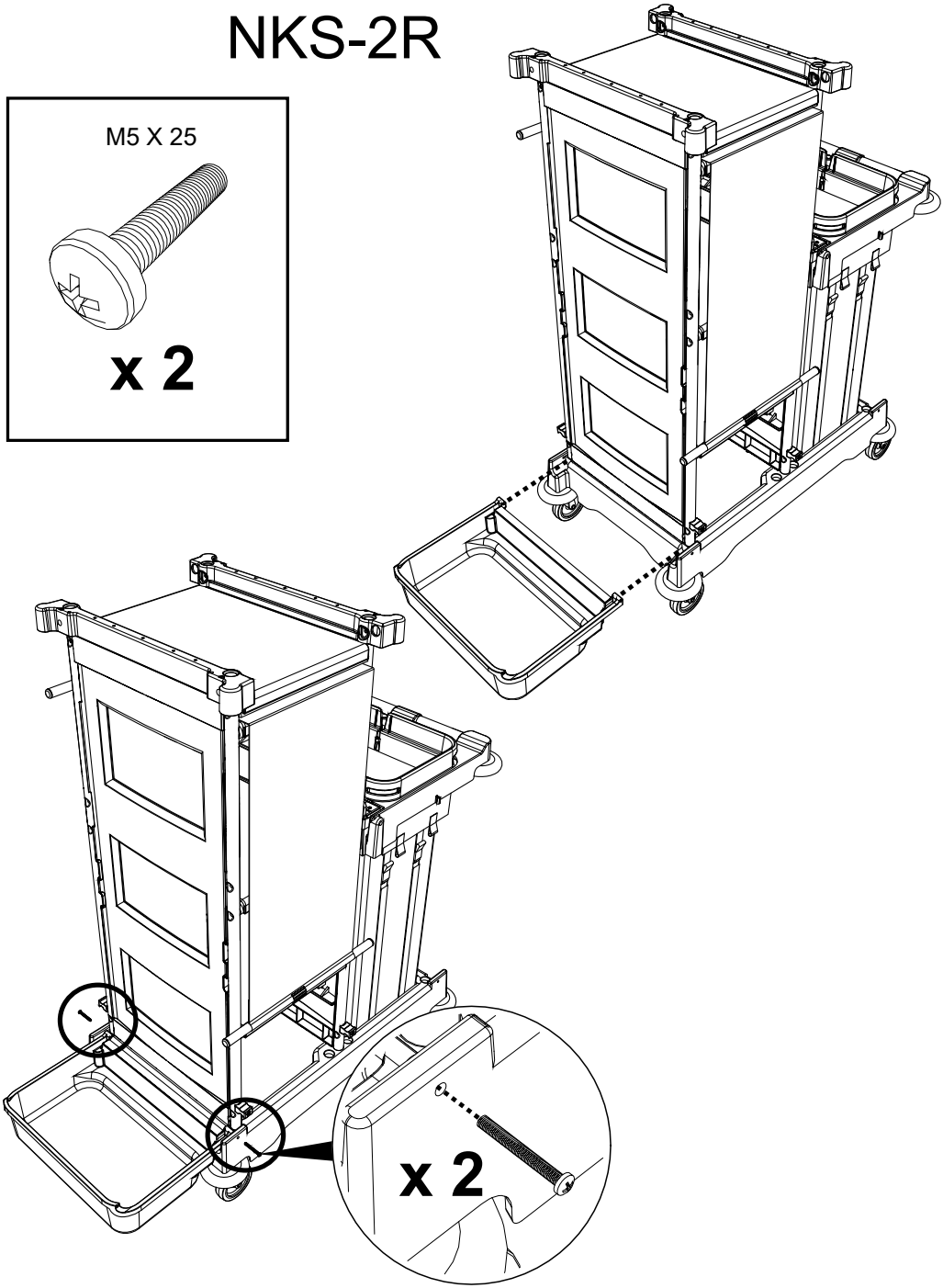

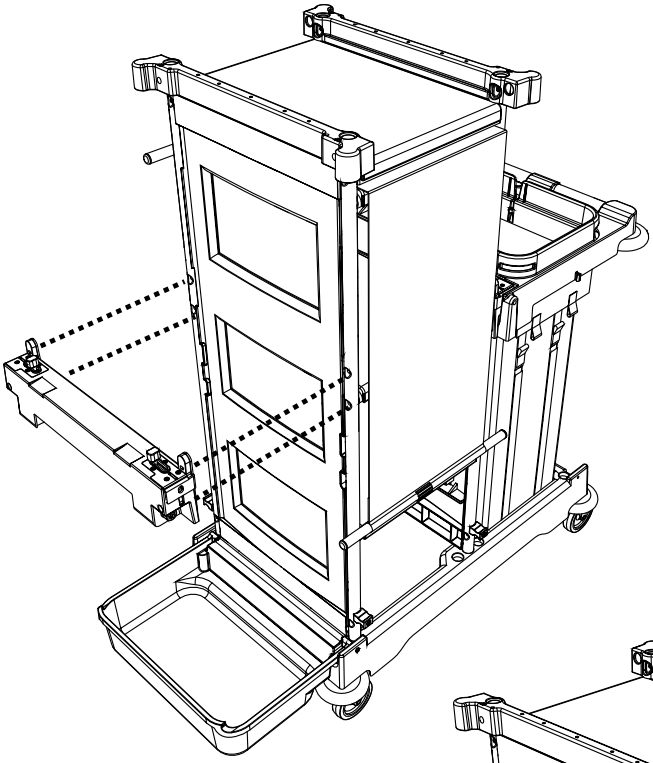

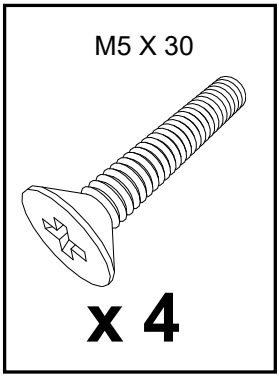
M5 X 30
x 4

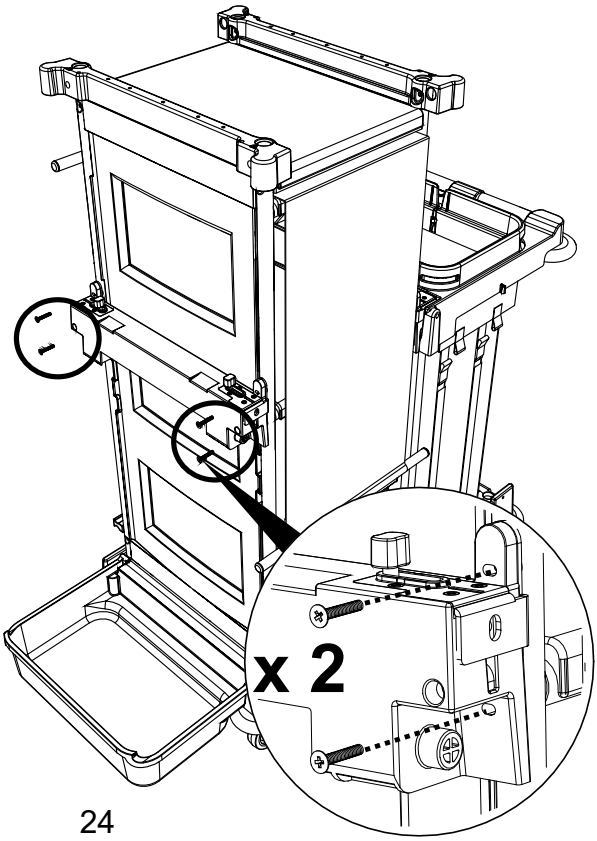
x 2

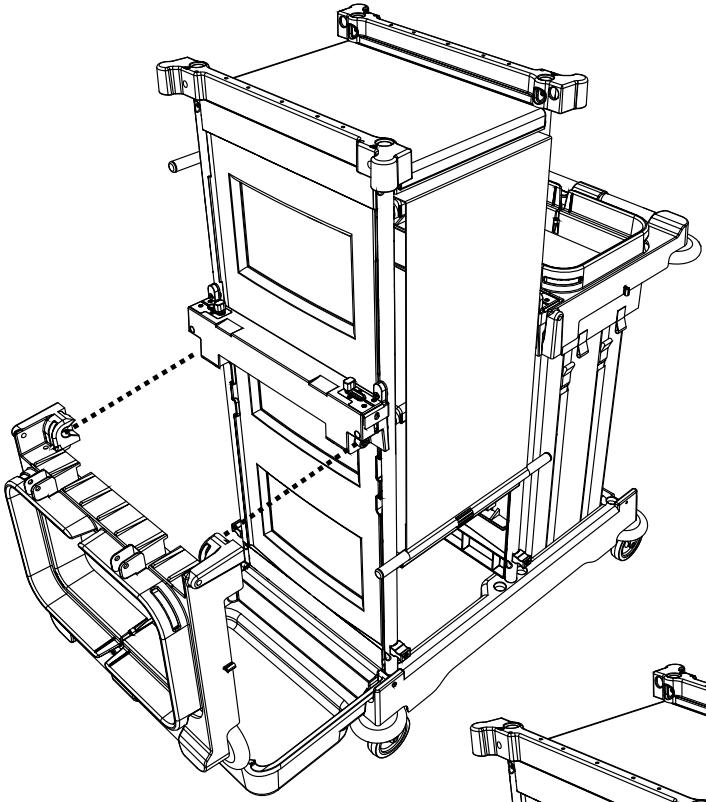

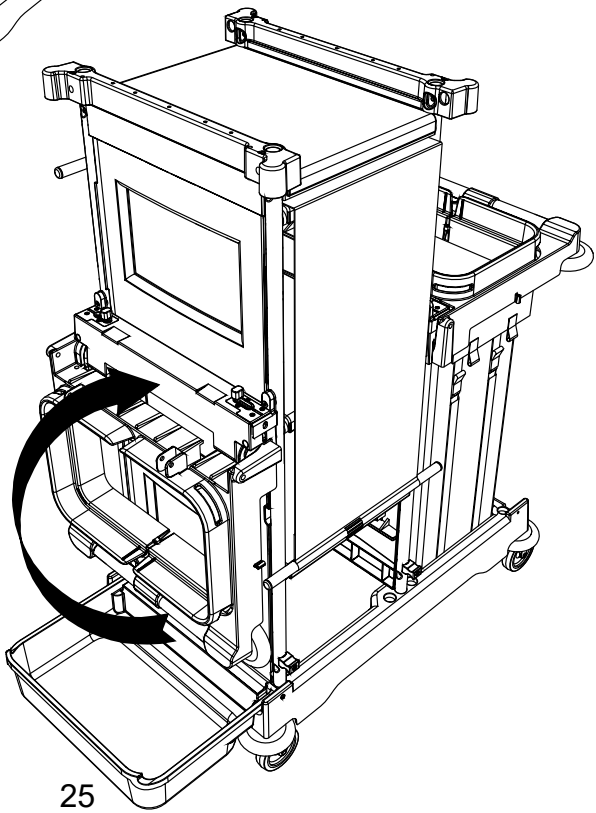

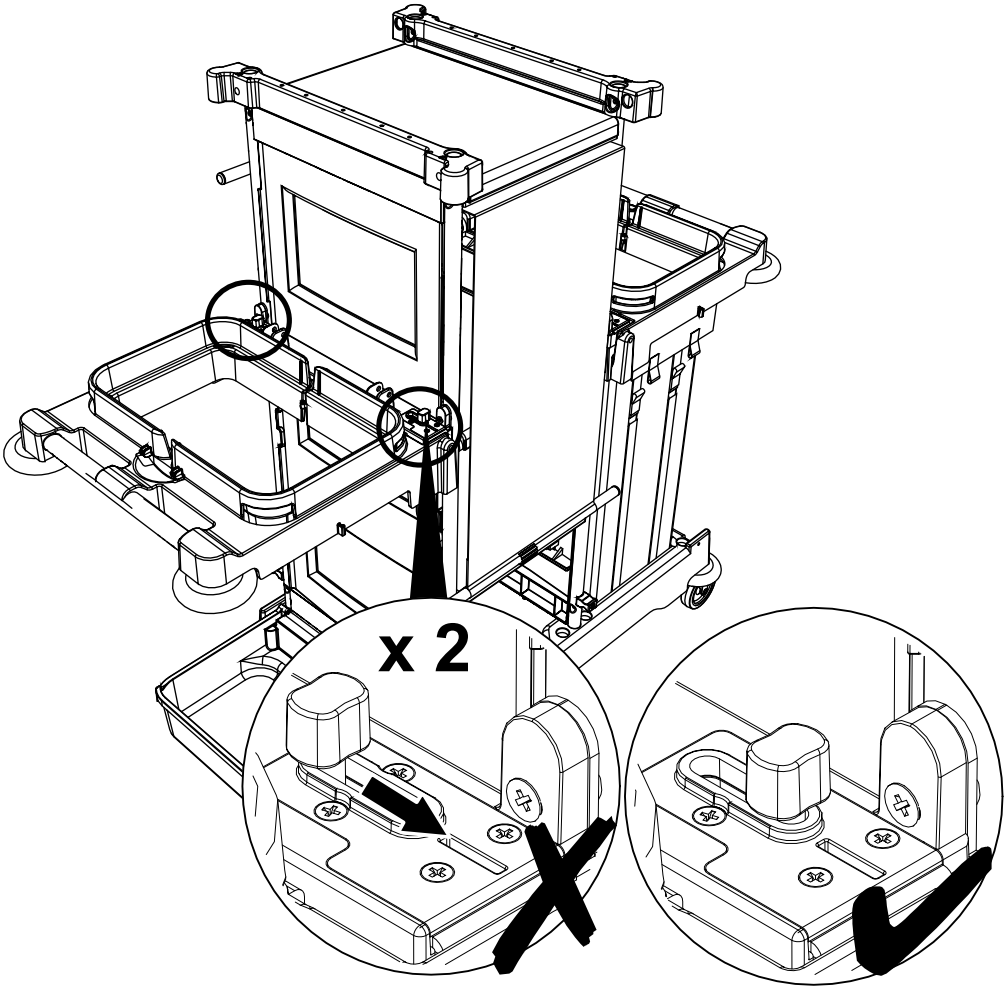
x 2

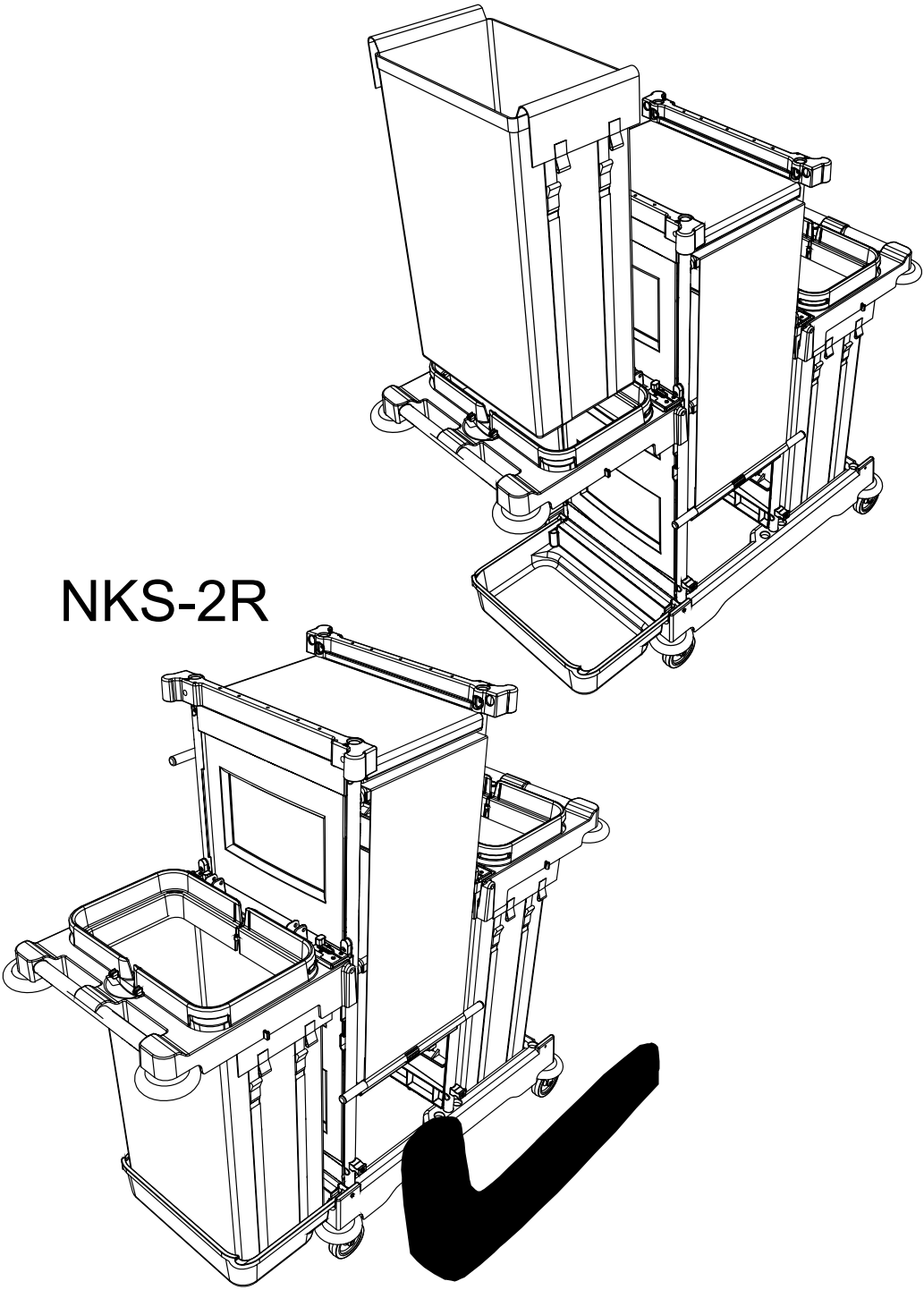
NKS-2R

numatic.com

Numatic International Limited (Head Office)
Chard, Somerset TA20 2GB, UNITED KINGDOM
Tel: 01460 68600 numatic.com

Numatic International GmbH
Fränkische Straße 15-19, 30455 Hannover, DEUTSCHLAND
Tel: +49 (0) 511 984 2160 numatic.de

Numatic International Denmark
Fränkische Straße 15-19, 30455 Hannover, DEUTSCHLAND
Tel: +45 (0) 316 40808 numatic-online.dk

Numatic International S.A.S
13/17 rue du Valengelier, EAE la Tuilerie, 77500 Chelles, FRANCE
Tel: +33 (0) 164 726 161 numatic.fr

Numatic International BV
Vennootsweg 15, 2404 CG, Alphen aan den Rijn, NEDERLAND
Tel: +31 (0) 172 467 999 numatic.nl

Numatic International Schweiz AG.
Sihlbruggstrasse 3A, 6340 Baar, SCHWEIZ
Tel: +41 (0) 41 768 0760 numatic.ch

Numatic International (PTY) Ltd.
Cnr. 16th & Pharmaceutical Road, Randjes Park, Midrand 1685, SOUTH AFRICA
Tel: +27 (0) 861 686 284 numatic.co.za

Numatic International ULDA
Rua da Boa Viagem, 177, 4470 - 210 Moreira Maia, PORTUGAL
Tel: +351 220 047 700 numatic.pt

Numatic International SLU
Delegación de CATALUÑA-BARCELONA, PZ LETAMENDI, 13, 08007 Barcelona, SPAIN
Tel: +34 901 200 350 numatic.es

Numatic International Italy S.R.L
Via Luigi Galvani, 2, Z.I. Talponedo, 33080 Porcia (PN), ITALY
Tel: +39 (0) 434 046 211 numatic.it

Specification subject to change without prior notice
numatic.com © Numatic International Limited

906534 01/24 (A05)