Numatic

NKA 111U

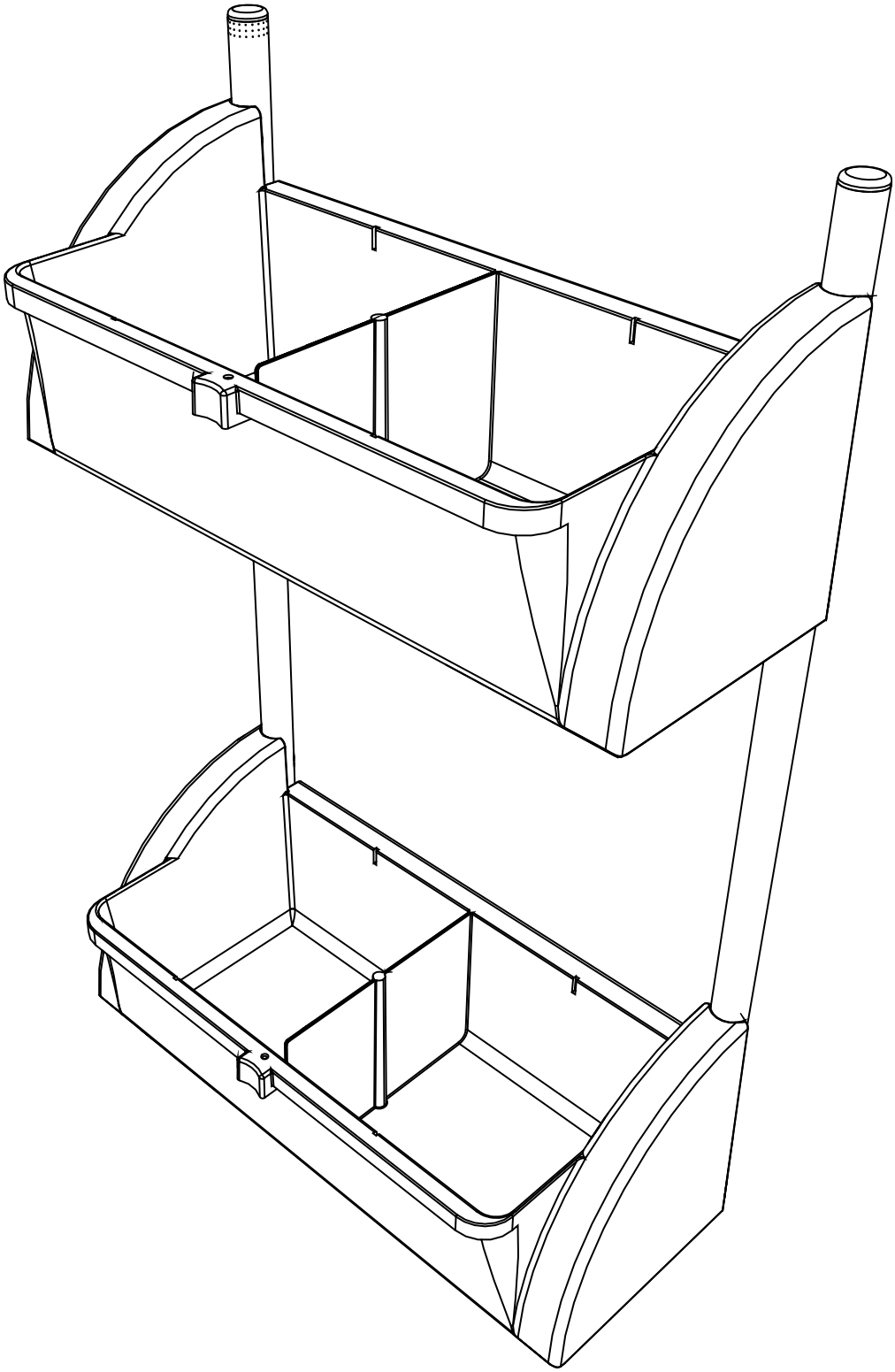

906169 NKU111U ASSEMBLY INSTRUCTIONS DOC– 27574 A02 09/2017

906170

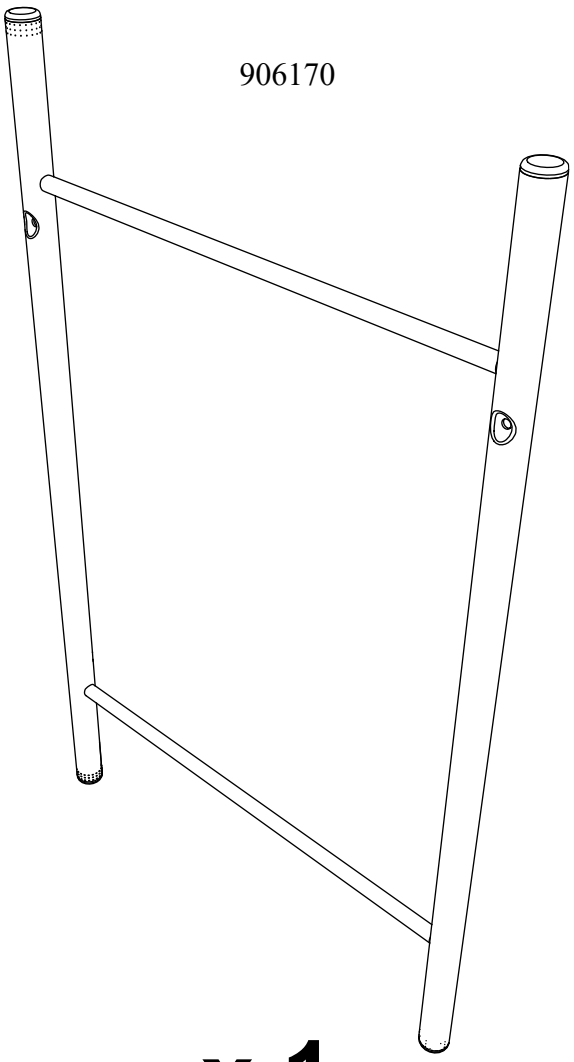

x 1

223443

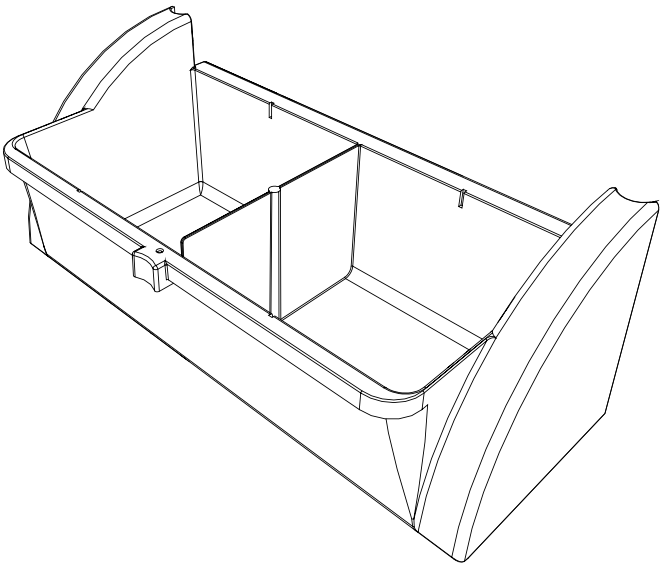

x 2

21932V
M5 X 40

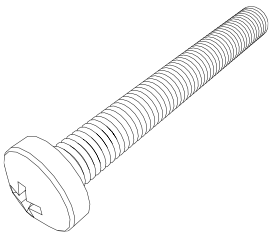

x 2

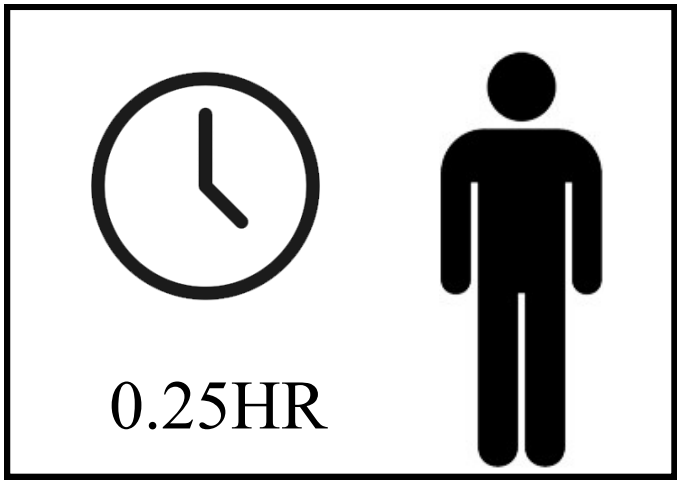

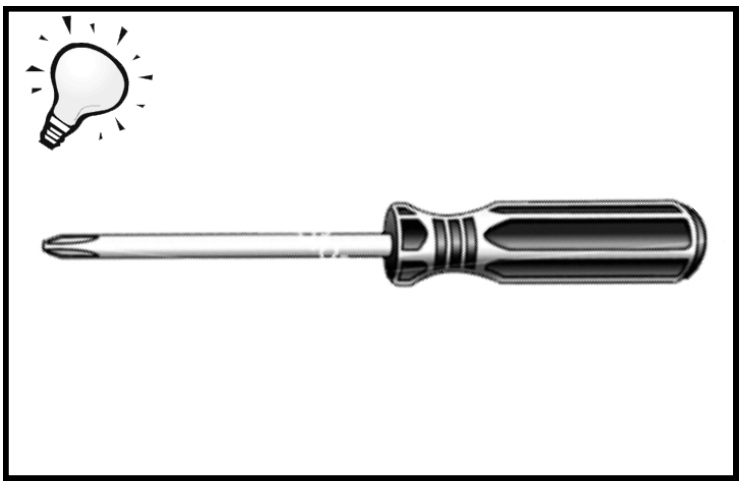

21932V
M5 X 40

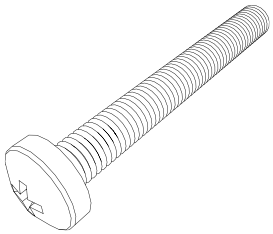
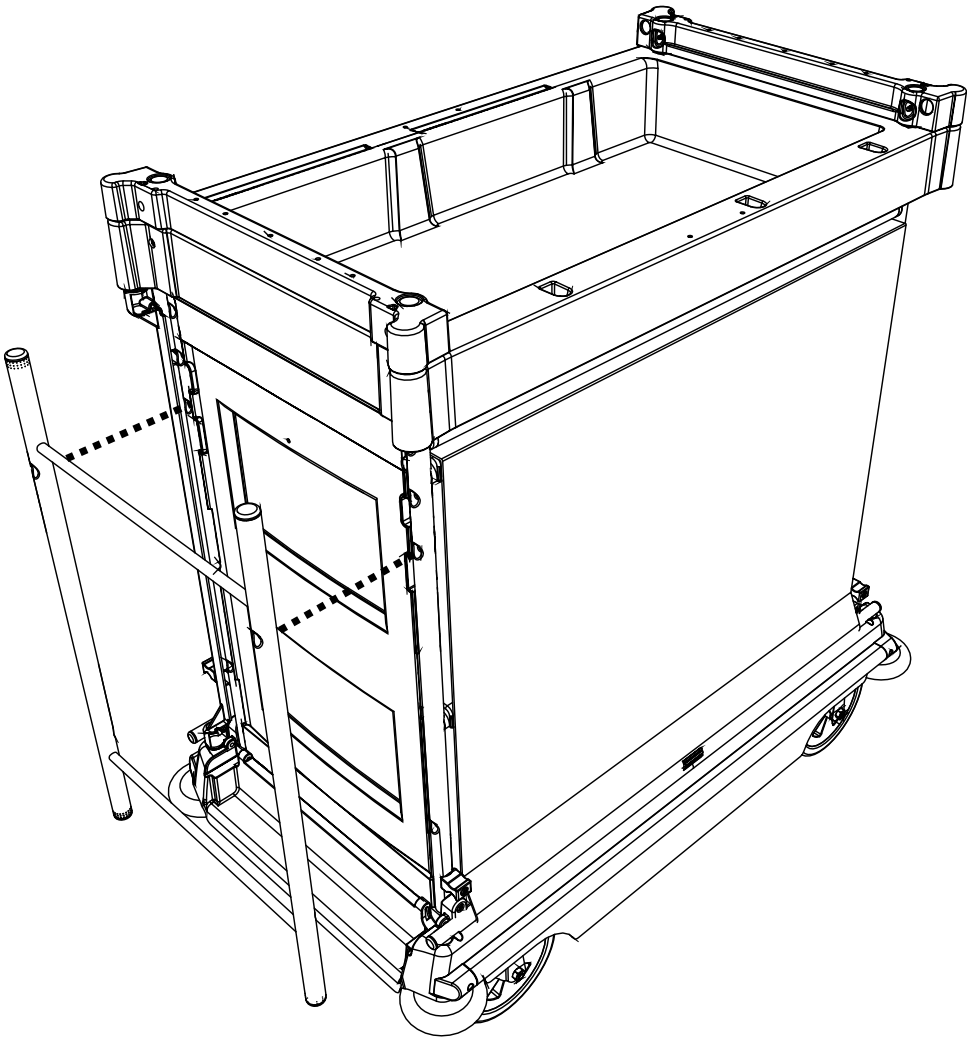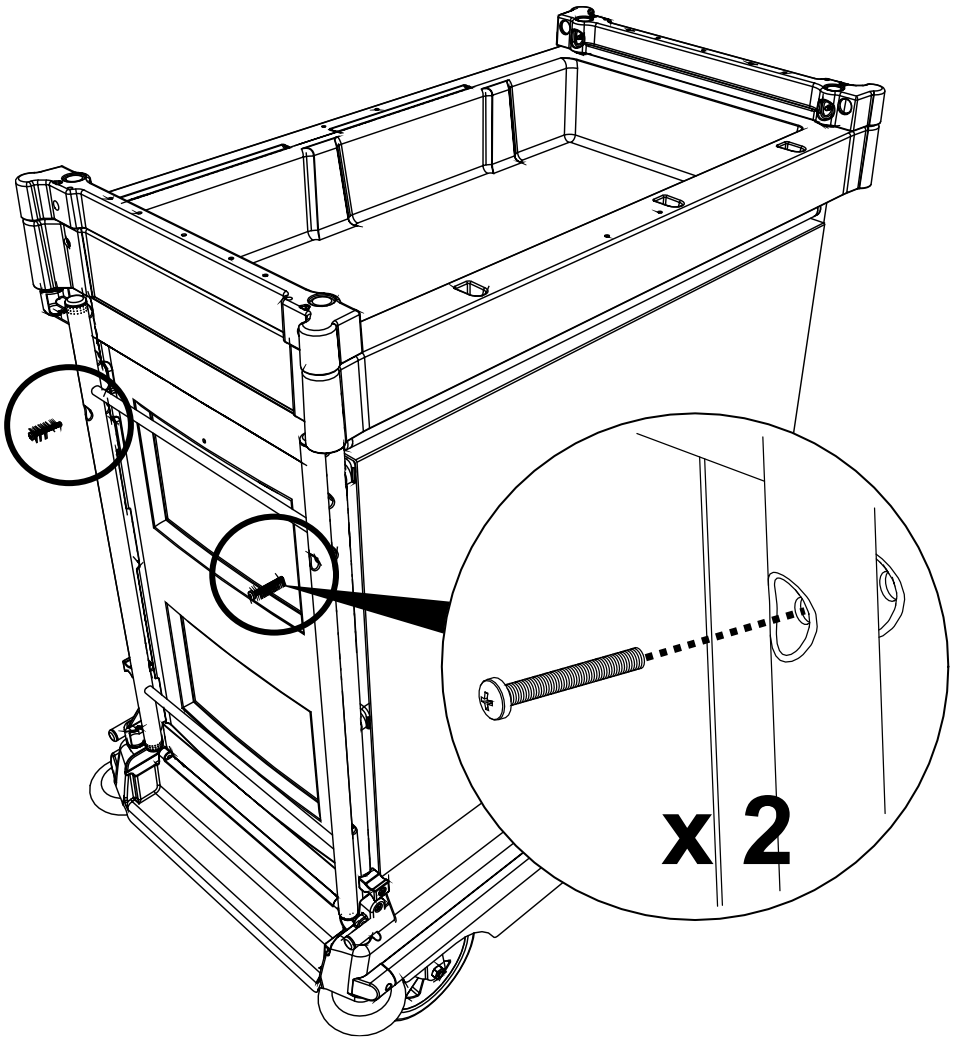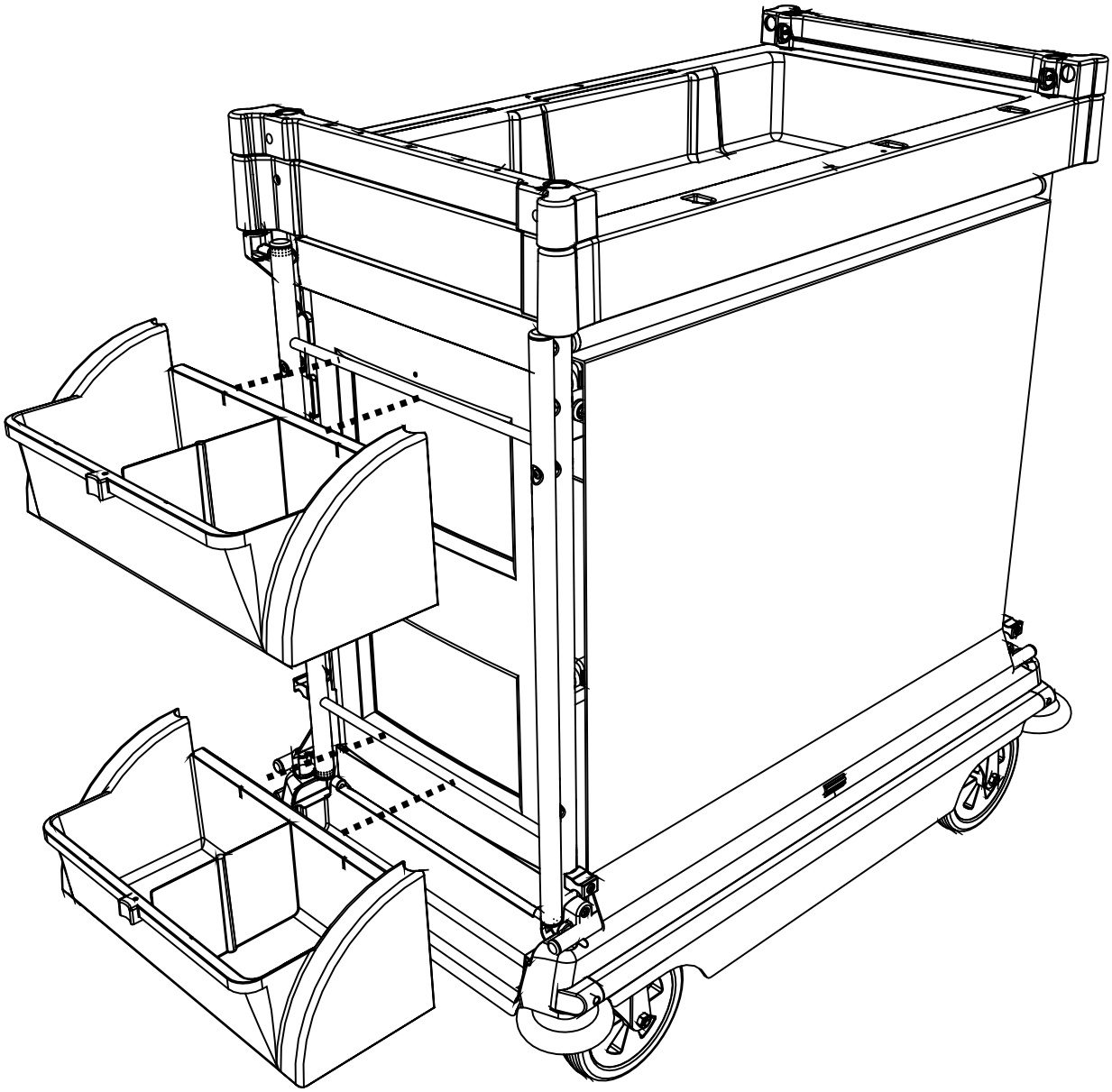
x 2