Numatic

NKA109U

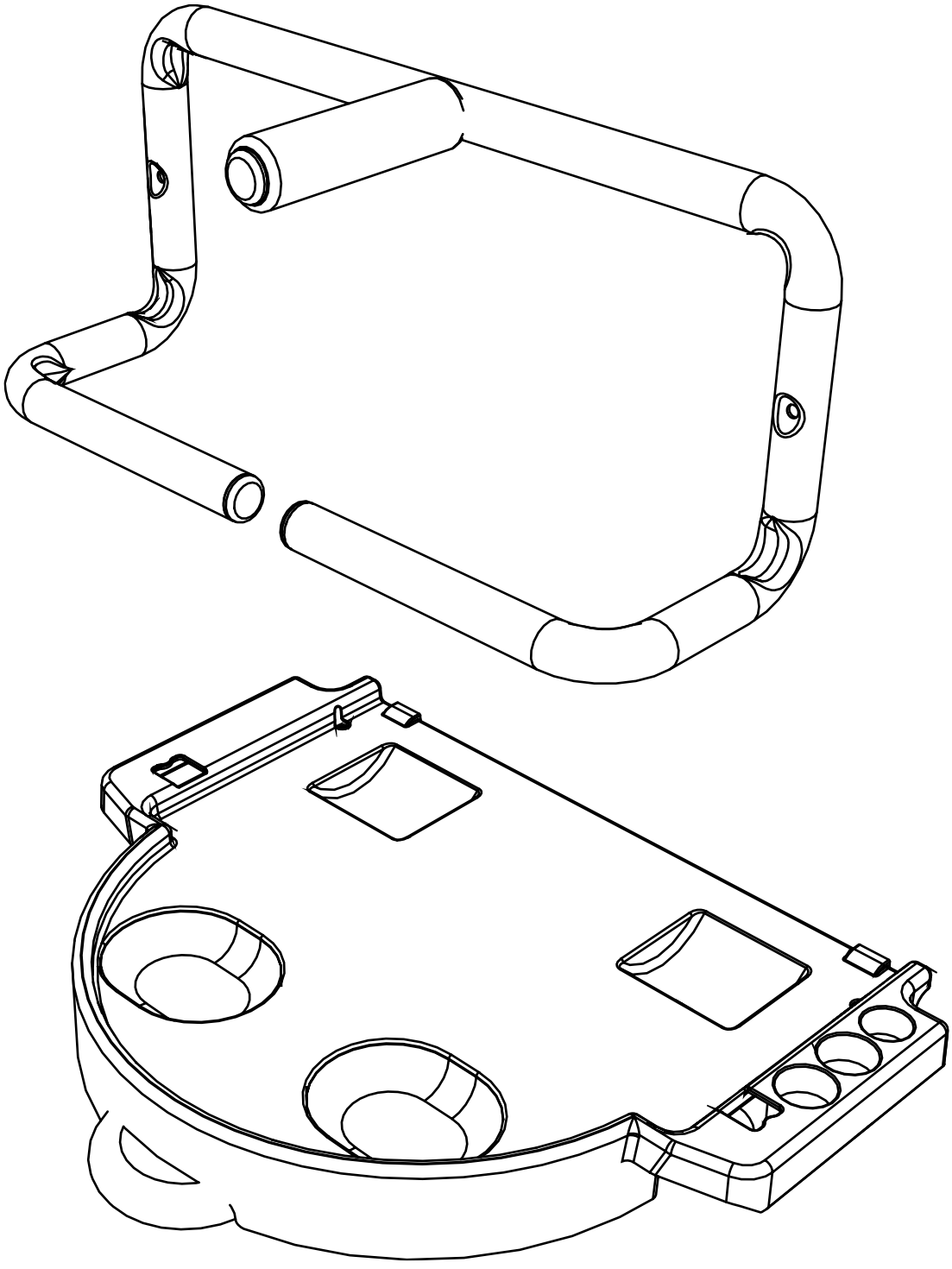

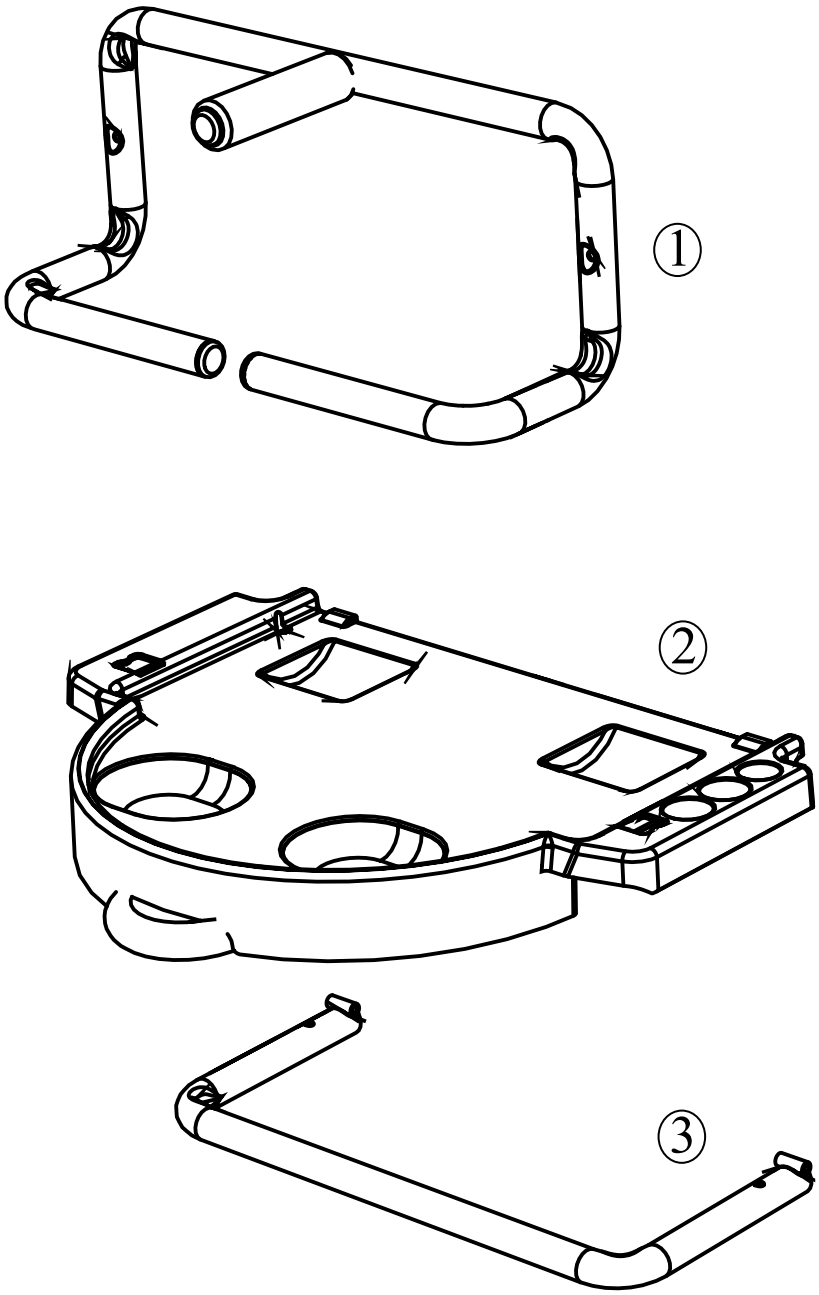

ITEM	PART	DESCRIPTION	QTY
1	906034	VAC ACCESSORY FRAME	1
2	237752	VAC PLATFORM MOULDING	1
3	402049	VAC SUPPORT TUBE WELDED ASSEMBLY	1

Numatic

221150
M5 X 45

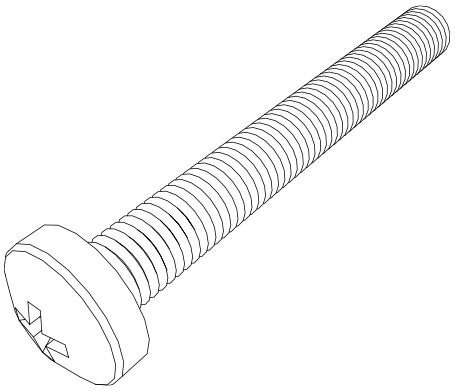

x 2

21932V
M5 X 40

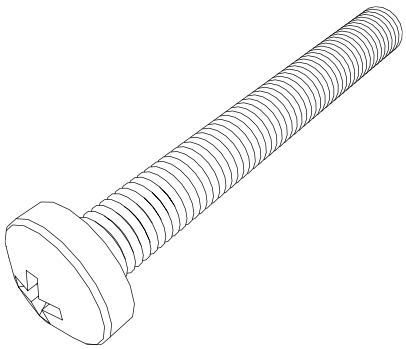

x 2

219054
M5 X 20

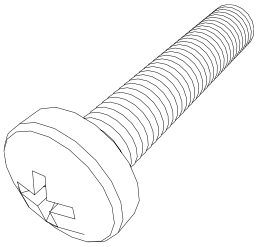

x 2

628276

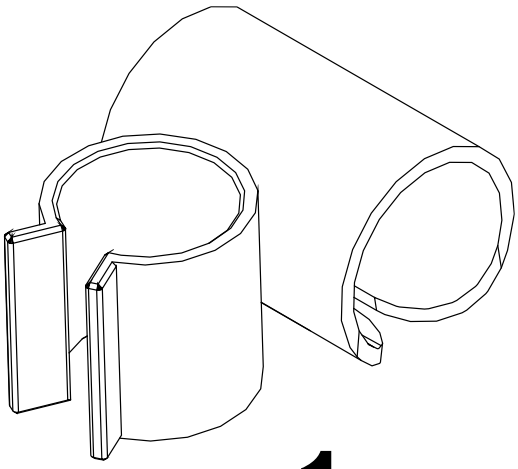

x 1



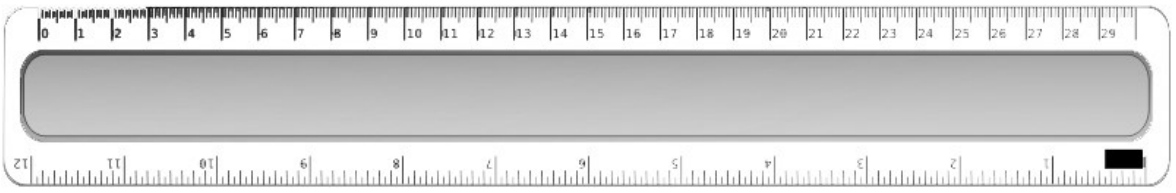

0.50HR

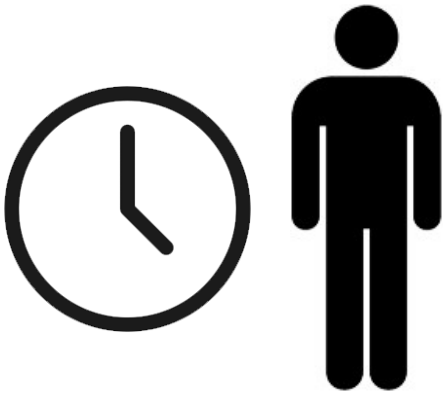



219054
M5 X 20

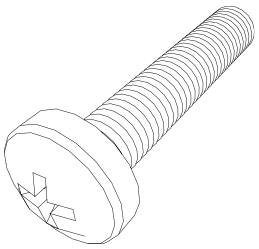

x 2

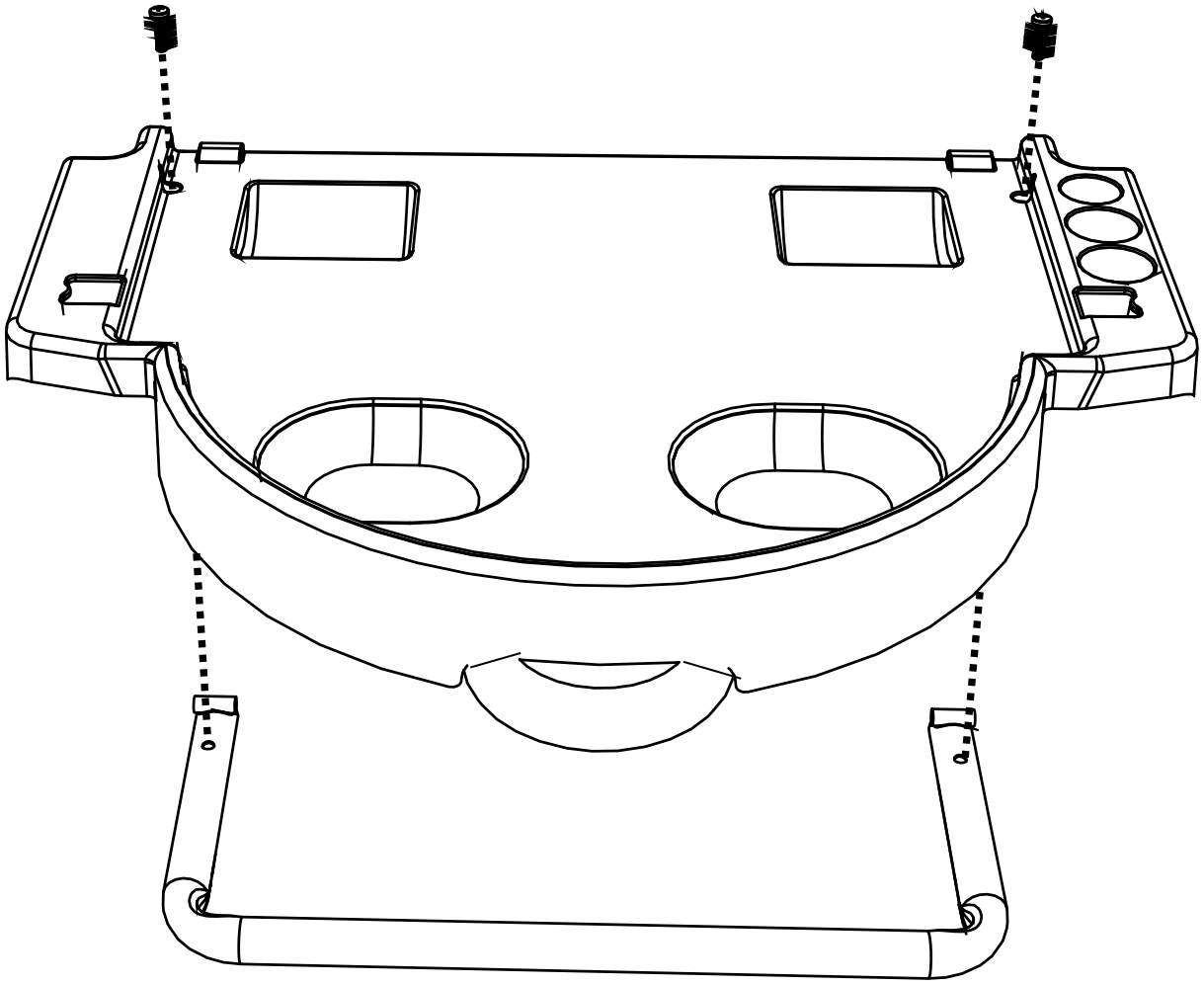

221150
M5 X 45

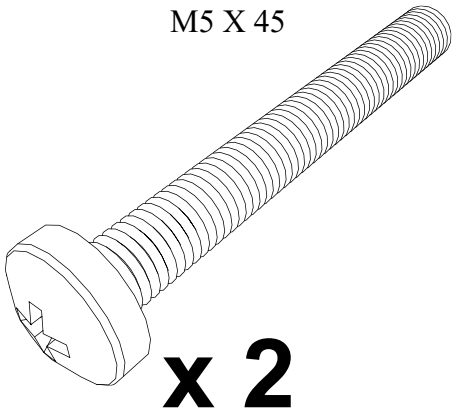

x 2

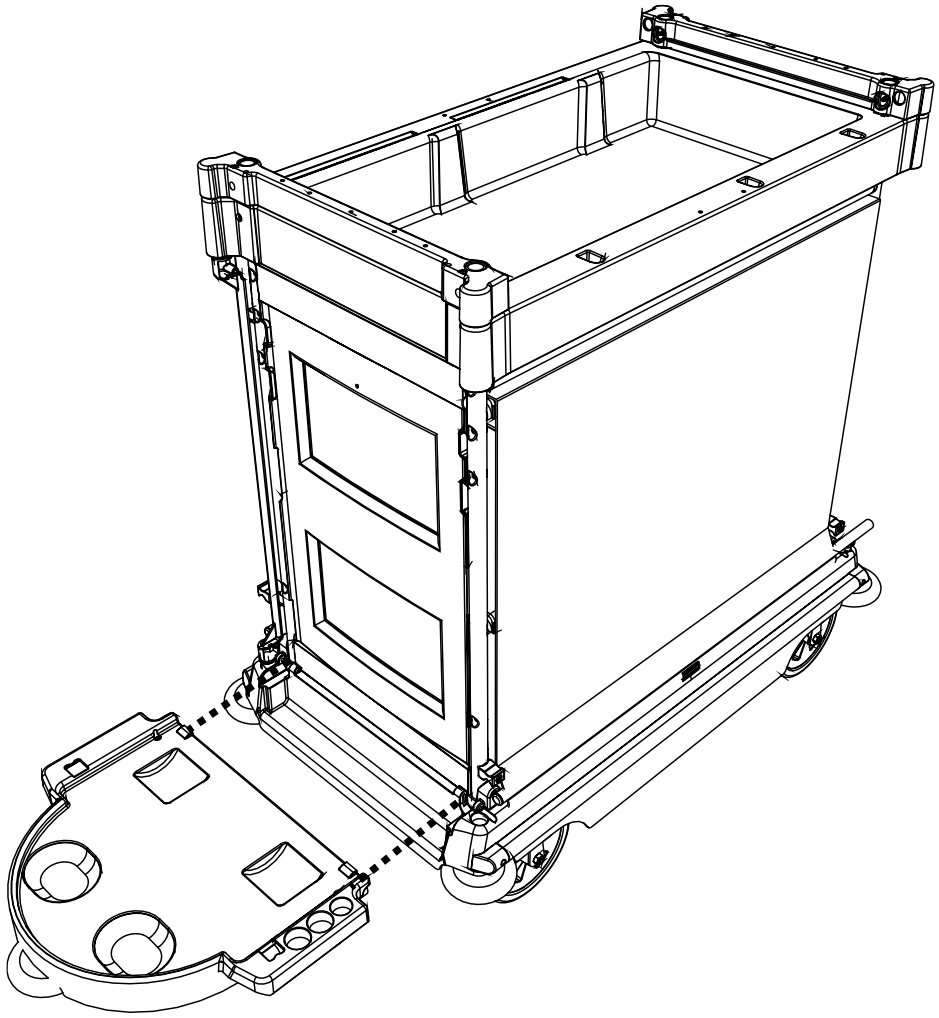

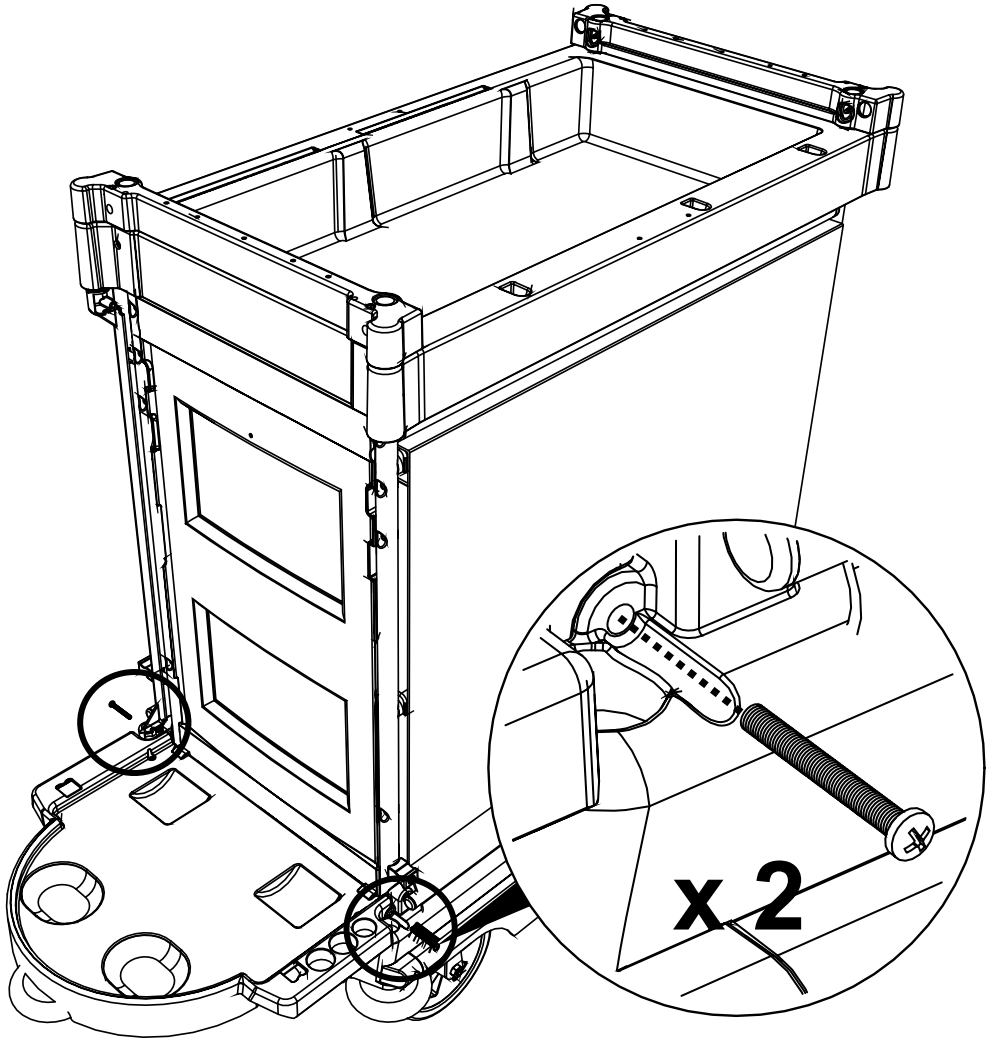

x 2

21932V
M5 X 40

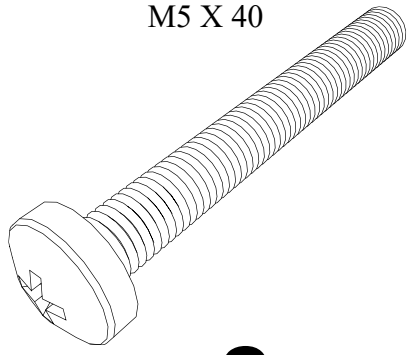

x 2

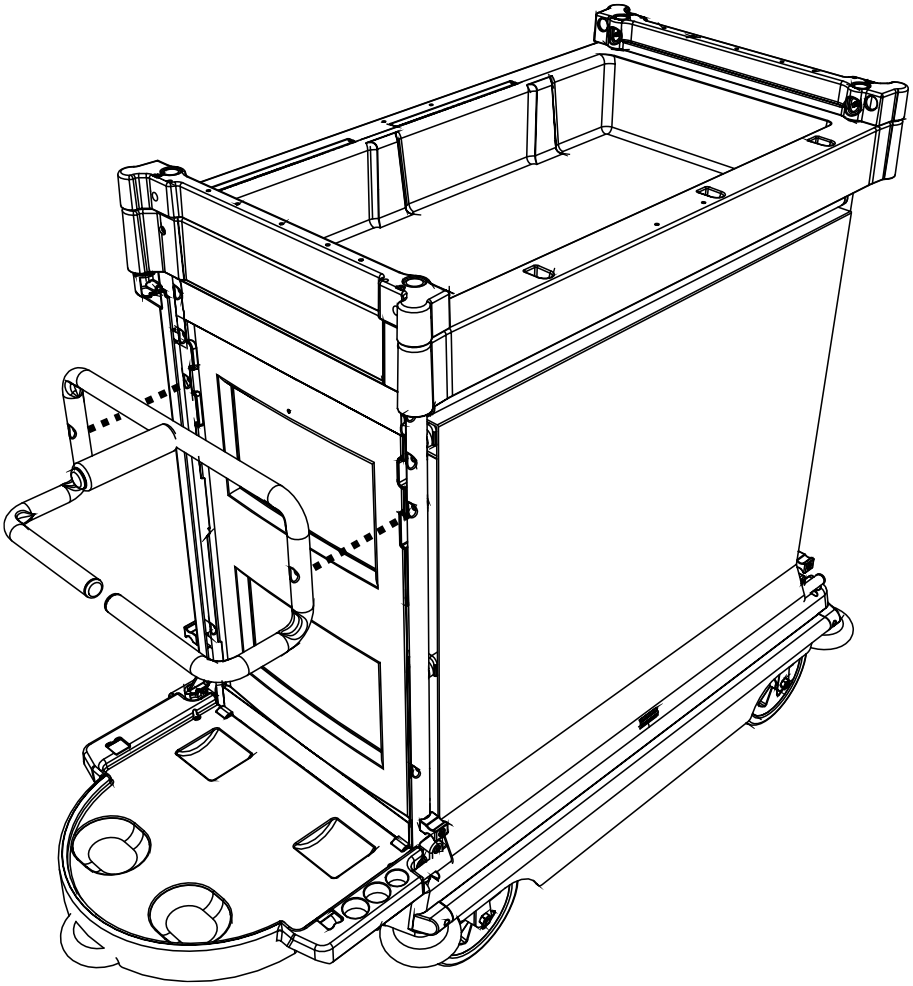

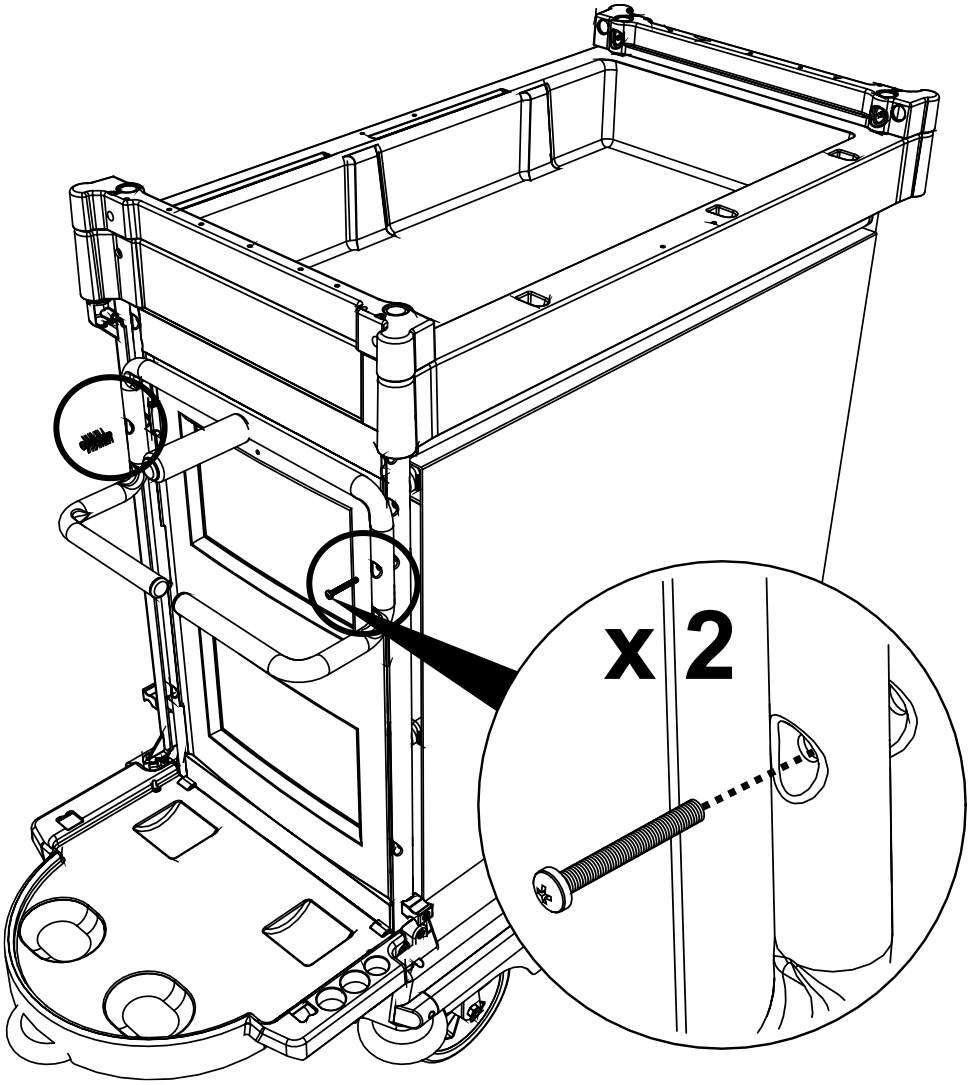

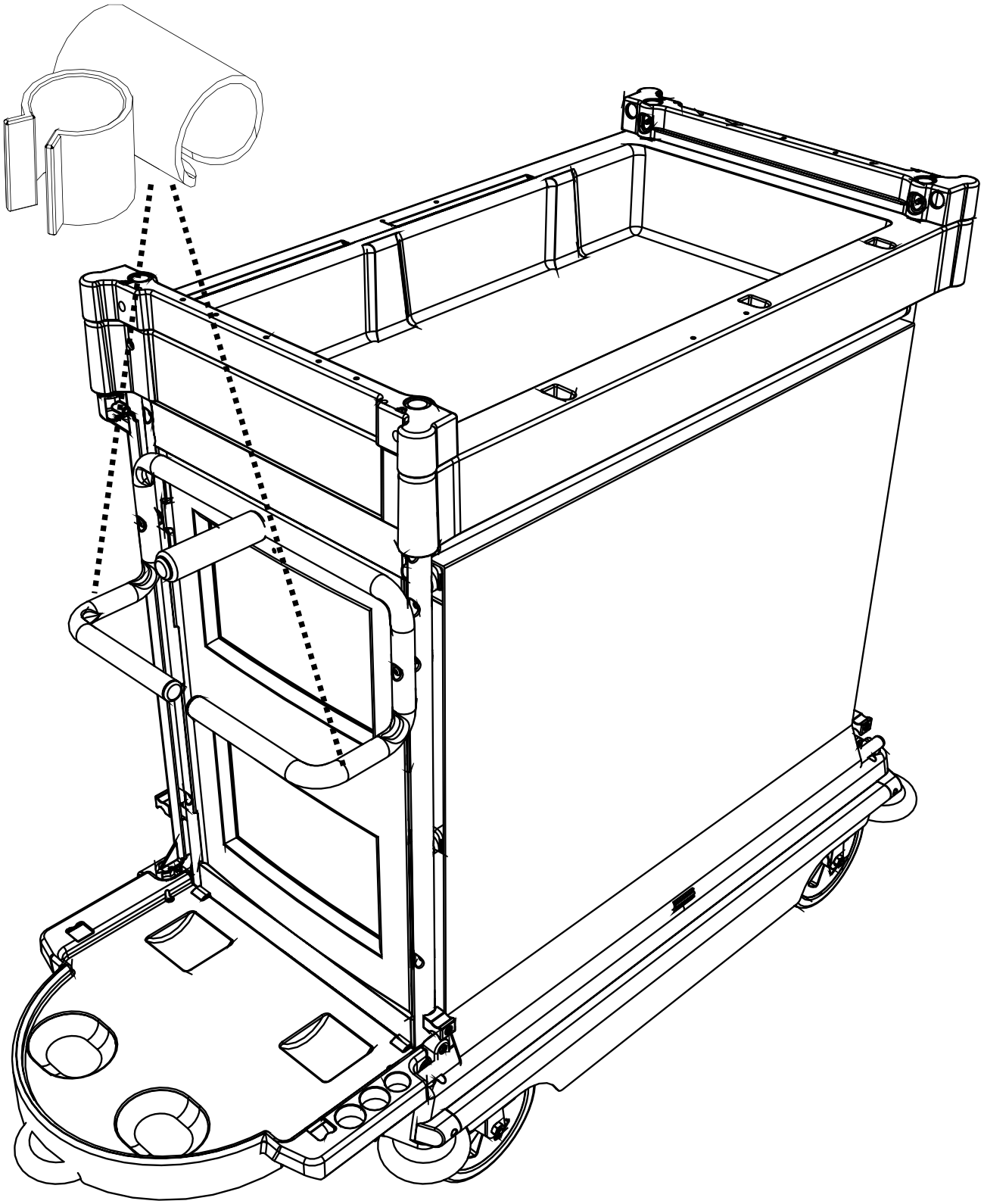


Numatic
INTERNATIONAL